Water Specialist 1.5” Plastic No Hard Water Bypass

Certified to NSF/ANSI/CAN 61 and NSF/ANSI 372.

Order No. V3035

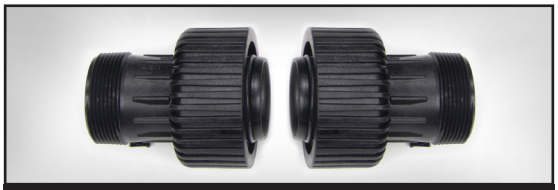

WS1.5P Fitting Assembly QC to NPT or BSPT
Order No. V4430-01 or V4430-02

WS1.5P Fitting Assembly QC to QC
Order No. V4430-03

- Fiber Reinforced Composite Material
- Utilizes WS1.5P Control Valve Fittings
- Hydraulically balanced piston valve
- Provides no raw water bypass during regeneration
- Provides choices of treated or non-treated water regeneration
- Proven and reliable Clack DC drive assembly
- Low voltage drive assembly controlled by valve’s circuit board
- Flow from female inlet to outlet has (Cv 32.19) has a 3.47 PSI drop at 60 GPM
- Operating Pressures:
  20 PSI Minimum
  125 PSI Maximum
- Operating Temperatures:
  40°F Minimum
  110°F Maximum

ORDER NO. V3035 • DESCRIPTION: WS1.5P NO HARD WATER BYPASS

Drawing No.	Order No.	Description	Quantity
1	V3073	MAV/NOHWBY COVER ASY	1
2	V3476	WS MOTOR ASY 8 FT	1
3	V3592	SCREW #8-1 PHPN T-25 SS	3
4	V3262-01	WS REDUCTION GEAR COVER ASY	1
5	V3110-01	WS1 DRIVE REDUCING GEAR PLAIN	3
6	V3264	WS2 BYPASS REDUCTION GEAR AXLE	3
7	V3527	SCREW 1/4-20 X 3/4 BHSCS SS (5/32" HEX ALLEN WRENCH REQUIRED)	4
8	V3072	MAV/NOHWBY 1/125/15 DRIVE ASY	1
9	V3506-01	MAV/NOHRD 1/125/15 PISTON	1
10	V3074	MAV 1/125/15 STACK ASY	1
11	V4380	WS15P NHWBY BONDED BODY	1
Not Shown	V3805	STRAIN RELIEF COVER KIT	1
*12	V3042	WS1/1.25/1.5 MAV & NHWB SERVICE PACK	

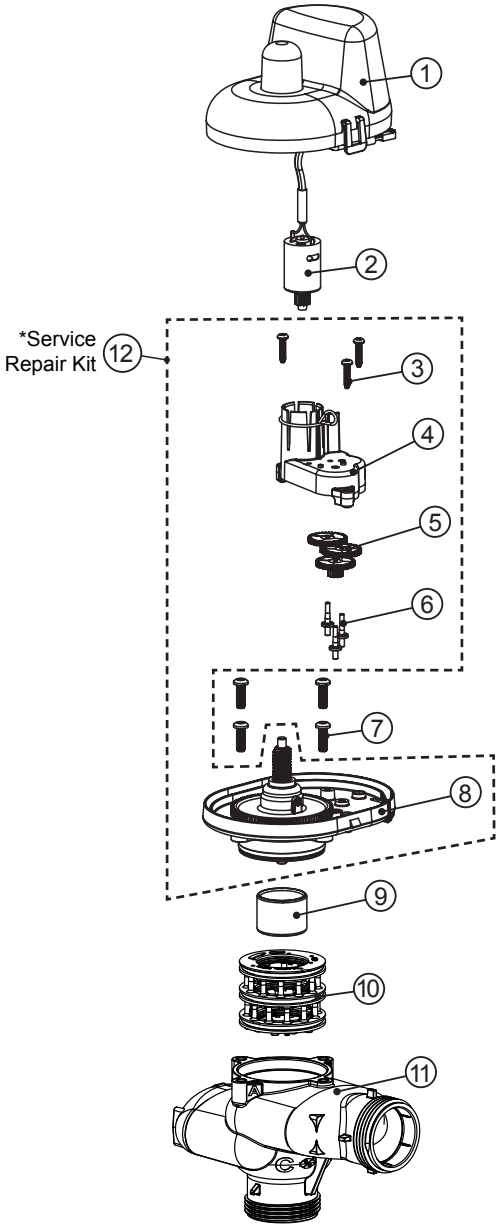

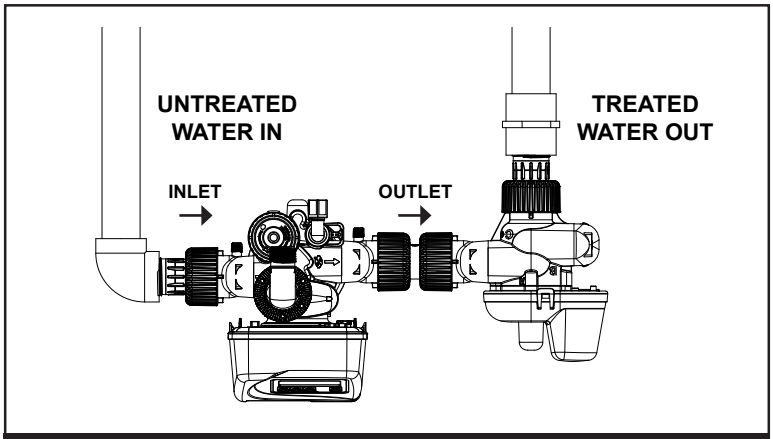

EXAMPLE OF A NO HARD WATER BYPASS CONFIGURATION

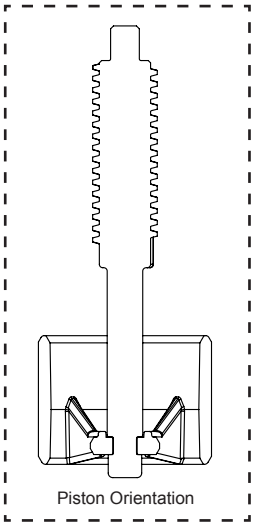

- **Operating Pressures:**
  20 PSI Minimum / 125 PSI Maximum
- **Operating Temperatures:**
  40°F Minimum / 110°F Maximum

Clack®

www.clackcorp.com

Clack Corporation

4462 DURAFORM LANE • WINDSOR, WISCONSIN 53598-9716 USA

PHONE **(608) 846-3010** FAX (608) 846-2586 SALES/CUSTOMER SERVICE FAX (800) 755-3010

Form No. 3180 • 2/27/2020