WS1.5 Plastic Inline Flow Meter

V3045, V3045-15, V3045BSPT, V3045BSPT-15, V3045QC and V3045QC-15

- 1.5” Inline meter suited for large residential, commercial and industrial applications
- Fiberglass reinforced composite
- Service flow range 0.5 to 75 gpm (2-284 lpm)
- Meter accuracy ±5%
- Reliable and proven turbine design
- Available 28” or 15’ meter cable options
- Available with 1.5” NPT, BSPT or Quick Connect Adapter Kits

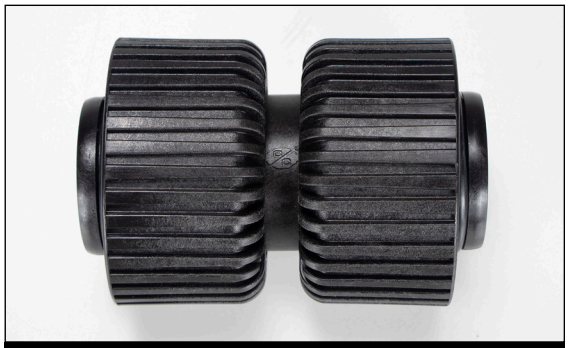

V4354 • WS15P 1.5” QC X QC

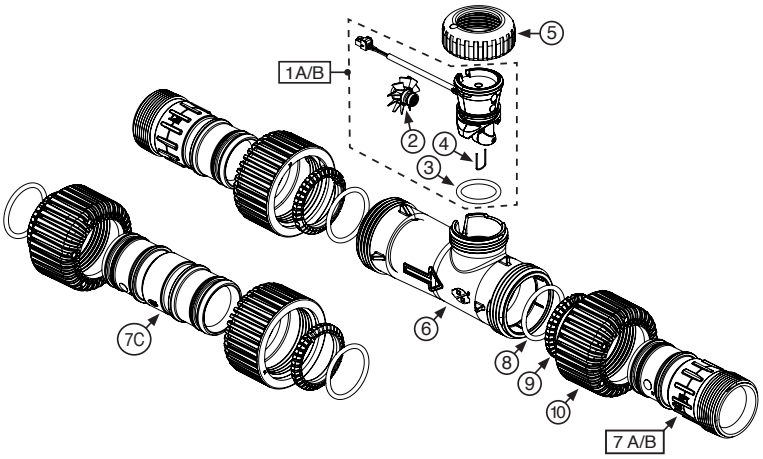

Drawing No.	Order No.	Description
1A	V3003-02	WS Remote Meter Asy 28 in. Cord (includes V3118-03, V3501 and V3105)
1B	V3221	WS Remote Meter Asy 15 ft. Cord (includes V3118-03, V3501 and V3105)
2	V3118-03	WS1.5/2 Turbine Asy
3	V3105	O-Ring 215
4	V3501	WS1.5/2 Turbine Clip
5	V3151	WS Quick Connect Nut
6	V4356	WS1.5 Meter Housing Universal
7A	V4353	WS15P 1.5” NPT X QC
7B	V4355	WS15P 1.5” BSPT X QC
7C	V4354	WS15P 1.5” QC X QC
8	V4367	WS15P O-RIng 222
9	V4345	WS15P Split RIng
10	V4344	WS15P QC NUT
Not Shown	V4357	WS1.5 Flow Straightener (located inside meter housing)

INSTALLATION:

- For V3045/V3045-15 use 1.5” NPT pipe and fittings.
- For V3045BSPT/V3045BSPT-15 use 1.5” BSPT pipe and fittings.
- For V3045QC/V3045QC-15 use one of the 1.5” Quick Connect fittings from the WS15P Control Valve.

WHEN INSTALLING THE METER, YOU MUST LUBRICATE THE INTERNAL BORE OF THE METER HOUSING AND THE O-RING OF THE ADAPTER. MAKE SURE THE ARROW ON THE METER BODY IS GOING THE SAME DIRECTION AS THE WATER FLOW. THE METER CAN BE INSTALLED IN HORIZONTAL OR UPWARD WATER FLOW VERTICAL APPLICATIONS.

HYDROCARBONS SUCH AS VASELINE®, PETROLEUM JELLY, KEROSENE, BENZENE, GASOLINE, ETC., WILL DAMAGE PRODUCTS THAT CONTAIN O-RINGS OR PLASTIC COMPONENTS. EXPOSURE TO SUCH HYDROCARBONS MAY CAUSE THE PRODUCTS TO LEAK. DO NOT USE CLACK CONTROL VALVE PRODUCT(S) ON WATER SUPPLIES THAT CONTAIN HYDROCARBONS SUCH AS KEROSENE, BENZENE, GASOLINE, ETC.

THIS WATER METER SHOULD NOT BE USED AS THE PRIMARY MONITORING DEVICE FOR CRITICAL OR HEALTH EFFECT APPLICATIONS.

OPERATING PRESSURES: 20 PSI MINIMUM - 125 PSI MAXIMUM (1.4 - 8.6 bar)
OPERATING TEMPERATURE 40°F MINIMUM - 110°F MAXIMUM (4° - 43°C)

The 22 gauge wire crimp terminals are Molex Series 41572 or 40445. The housing connector is Molex Series 2695 White Housing, P/N 22-01-3037.

The housing connector diagram shows the proper installation of the RED, WHITE and BLACK wires for CLACK CORPORATION CONTROL VALVES. When connecting to other manufacturers control valves please contact your original equipment manufacturer for proper wiring instructions.

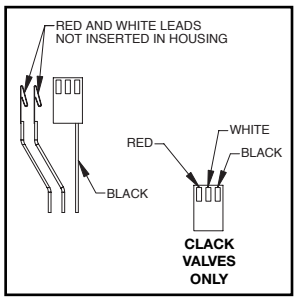

Wiring:
- The meter must be supplied with a DC voltage between 4 and 24 volts
- The RED wire is positive
- The BLACK wire is negative
- The WHITE wire is the meter output

Programming	Select 1.5 in the “FL” programming parameter for the correct meter pulse reading
Meter Pulses	37 Pulses/Gallon • 9.8 Pulses/Liters
Meter Accuracy	Flow: 0.50 – 75 gpm ± 5% Output Signal: 0.4 Hz – 47.5 Hz NOTE: Not all flow monitors will register accurately at the specified specs of this meter. Contact your monitor manufacture for limitations.
Preasure Drop	2.7 PSID @ 75 gpm

Clack®
www.clackcorp.com
Clack Corporation
4462 DURAFORM LANE • WINDSOR, WISCONSIN 53598-9716 USA
PHONE (608) 846-3010 FAX (608) 846-2586 SALES/CUSTOMER SERVICE FAX (800) 755-3010
Form No. 3173 • 10/1/2019