Water Specialist 1.5" Plastic Motorized Alternating Valve

Certified to NSF/ANSI/CAN 61 and NSF/ANSI 372.

Order No. V3034

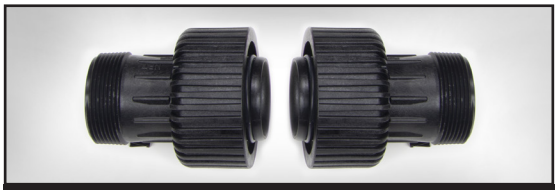

WS1.5P Fitting Assembly QC to NPT or BSPT
Order No. V4430-01 or V4430-02

WS1.5P Fitting Assembly QC to QC
Order No. V4430-03

- Fiber Reinforced Composite Material
- Allows for twin alternating system
- Utilizes WS1.5P Control Valve Fittings
- Hydraulically balanced piston valve
- Can be utilized with a single control valve system to accommodate a clean water source for regeneration
- Provides choices of treated or non-treated water regeneration
- Proven and reliable Clack DC drive assembly
- Low voltage drive assembly controlled by valve's circuit board
- Flow from Port A to Common (Cv 28.5) has a 4.43 PSI drop at 60 GPM
- Flow from Port B to Common (Cv 33.3) has a 3.25 PSI drop at 60 GPM
- Operating Pressures:
  20 PSI Minimum
  125 PSI Maximum
- Operating Temperatures:
  40°F Minimum
  110°F Maximum

ORDER NO. V3034 • DESCRIPTION: WS1.5P MOTOR ALT VLV

Drawing No.	Order No.	Description	Quantity
1	V3073	MAV/NOHWBY COVER ASY	1
2	V3476	WS MOTOR ASY 8 FT	1
3	V3592	SCREW #8-1 PHPN T-25 SS	3
4	V3262-01	WS REDUCTION GEAR COVER ASY	1
5	V3110-01	WS1 DRIVE REDUCING GEAR PLAIN	3
6	V3264	WS2 BYPASS REDUCTION GEAR AXLE	3
7	V3527	SCREW 1/4-20 X 1 BHSCS SS (5/32" HEX ALLEN WRENCH REQUIRED)	4
8	V3072	MAV/NOHWBY 1/125/15 DRIVE ASY	1
9	V3506-01	MAV/NOHRD 1/125/15 PISTON	1
10	V3074	MAV 1/125/15 STACK ASY	1
11	V4368	WS1.5P MAV BONDED BODY	1
Not Shown	V3474	WS ALT CONNECT CORD 8FT BLK	1
*12	V3042	WS1/1.25/1.5 MAV & NHWB SERVICE PACK	

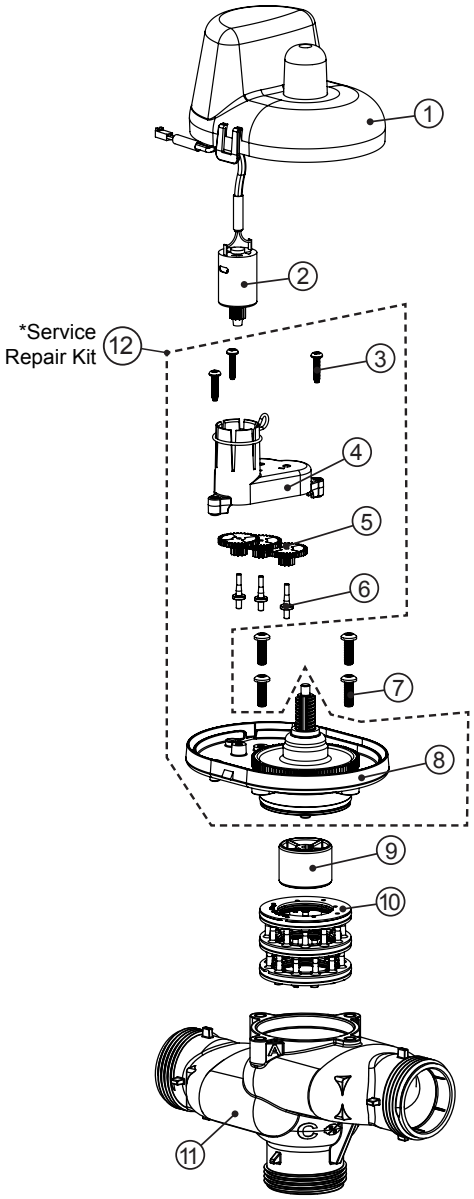

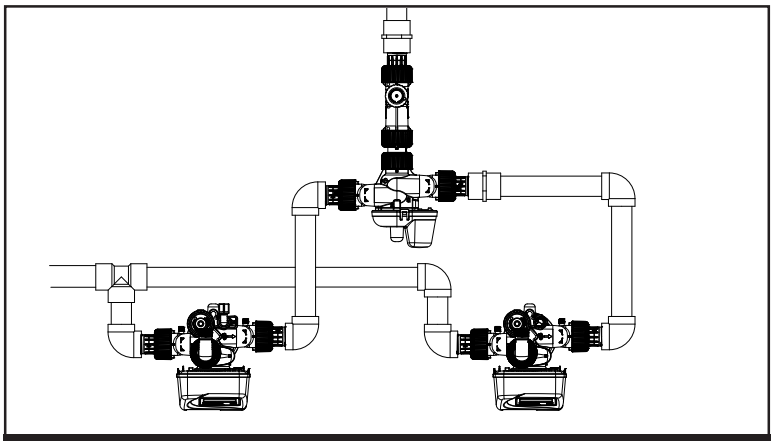

EXAMPLE OF A MAV CONFIGURATION

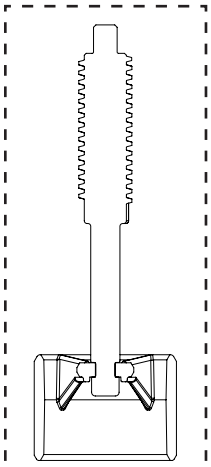

Piston Orientation
Motorized Alternating Valve

- **Operating Pressures:**
  20 PSI Minimum / 125 PSI Maximum
- **Operating Temperatures:**
  40°F Minimum / 110°F Maximum

Clack Corporation
www.clackcorp.com
4462 DURAFORM LANE • WINDSOR, WISCONSIN 53598-9716 USA
PHONE (608) 846-3010 FAX (608) 846-2586 SALES/CUSTOMER SERVICE FAX (800) 755-3010