Water Specialist
1.5”, 2” and 2”QC Control Valve
Drawings and Service Manual

HYDROCARBONS SUCH AS KEROSENE, BENZENE, GASOLINE, ETC., MAY DAMAGE PRODUCTS THAT CONTAIN O-RINGS OR PLASTIC COMPONENTS. EXPOSURE TO SUCH HYDROCARBONS MAY CAUSE THE PRODUCTS TO LEAK. DO NOT USE THE PRODUCT(S) CONTAINED IN THIS DOCUMENT ON WATER SUPPLIES THAT CONTAIN HYDROCARBONS SUCH AS KEROSENE, BENZENE, GASOLINE, ETC.

Table of Contents

	Pages
Installation Summary	4
General Specifications	5
Valve Port Orientation Diagrams	6-8
Installation Instructions	9-10
System Startup	11
Troubleshooting Procedures	17-20
WS1.5 Control Valve Cycle Positions	21-23
WS2 Control Valve Cycle Positions	24-26
Base Assemblies	30
Injector Graphs	34-38
Motorized Alternating Valve Applications	42-46
No Hard Water Bypass	47-48

Service Instructions

Service Step	Description	Exploded Views	Instructions
1	Front Cover and Drive Assembly	*	12
2	Drive Cap Assembly	27-29	13
3	Pistons	27-29	14
4	Spacer Stack Assembly	27-29	14
5,7	Injector Cap, Screen, Injector Plug and Injector	32-33	15
6	Refill Flow Control Assembly or Refill Port Plug	35	15
8	Drain Line Flow Control (DLFC)	39-40	16
9	Water Meter (not shown below)	41	43

* See software-specific Programming and Front Cover Manual

• WS1.5 shown

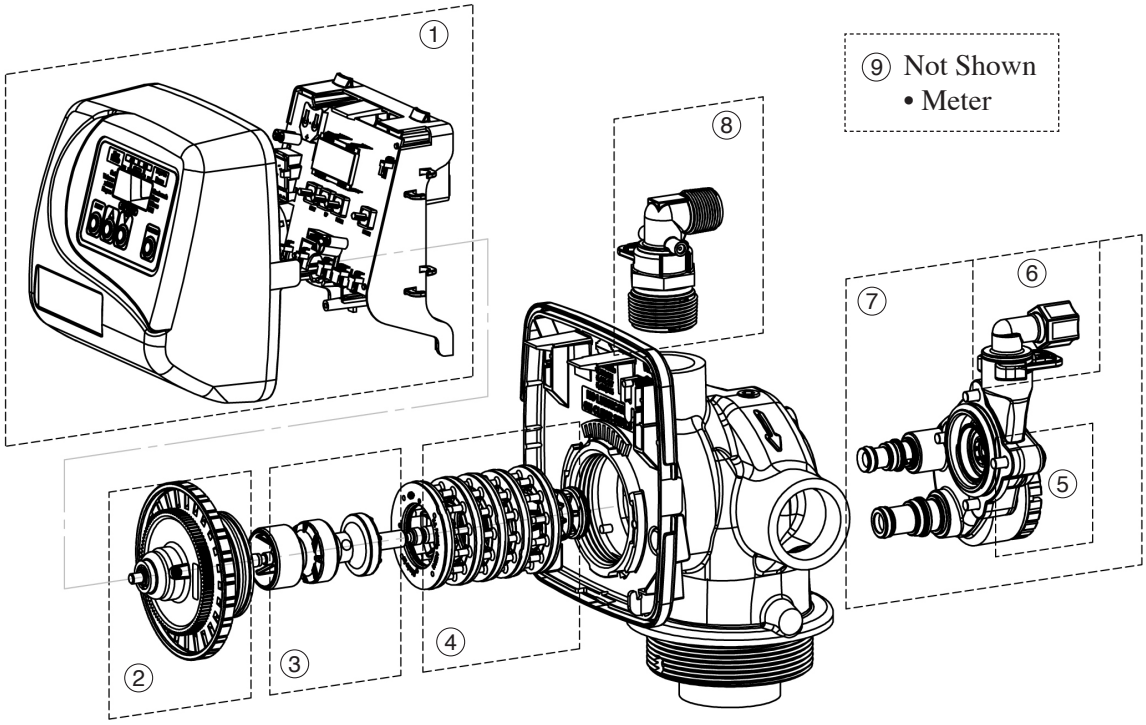

Installation Summary

Installation Date:_____
Installation Location: _____
Installer(s): _____
Phone Number: _____
Application Type: (Softener)_____ Other: _____

Water Source: _____

Water Test Results:
Hardness:_____ Iron: _____pH:_____
Other: _____
_____

Misc:
Service Flow Rates: min._____ max._____
Tank Size: Diameter _____ Height: _____
Resin or Media Volume: _____
Resin or Media Type: _____
Capacity: _____
Salt or Fill Setting per Regeneration: _____
Brine Tank Size: _____

Control Valve Configuration:
Valve Type: _____
Valve Part Number:_____
Valve Serial Number: _____
Regenerant Refill Control: _____ gpm/lpm
Injector Size: _____
Drain Line Flow Control: _____ gpm/lpm

General Specifications

Minimum/Maximum Operating Pressures	20 psi (138 kPa) -125 psi (862 kPa)			
Minimum/Maximum Operating Temperatures	40°F (4°C) – 110°F (43°C)			
Power Adapter: Supply Voltage Supply Frequency Output Voltage Output Current	U.S. 120V AC 60 Hz 12V AC 500 mA	International 230V AC 50 Hz 12V AC 500 mA		
No user serviceable parts are on the PC board, the motor, or the Power adapter. The means of disconnection from the main power supply is by unplugging the Power adapter from the wall.				
Service flow rate	WS1.5 Valve: 70 gpm (265 lpm, 15.9 m^3/h) @ 15psig (103kPa) drop WS2 Valve: 115 gpm (435 lpm, 26.1 m^3/h) @ 15psig (103kPa) drop WS2QC Valve: 125 gpm (473 lpm, 28.4 m^3/h) @ 15 psig (103 kPa) drop			
Backwash flow rate	WS1.5 Valve: 52 gpm (192 lpm, 11.8m^3/h) @ 25 psig (172 kPa) drop WS2 Valve: 80 gpm (303 lpm, 18.2 m^3/h) @ 25 psig (172 kPa) drop WS2QC Valve: 85 gpm (322 lpm, 19.3 m^3/h) @ 25 psig (172 kPa) drop			
CV Service	WS1.5 Valve: 18.1 WS2 Valve: 29.7 WS2QC Valve: 32.3			
CV Backwash	WS1.5 Valve: 10.4 WS2 Valve: 16.0 WS2QC Valve: 17.0			
Meter: Accuracy Flow Range	WS1.5 Valve: ± 5 % 0.5 – 75 gpm (1.9 – 283 lpm)	WS2 Valves: ± 5 % 1.5 – 150 gpm (5.7 – 568 lpm)		
Regenerant Refill Rate	WS1.5 Valves: 0.5 gpm (1.9 lpm) WS2 Valves: Variable - Shipped from Factory with 2.2 gpm (8.33 lpm)			
Injectors	WS1.5 Valve: See Injector Graphs V3010-15A through 15I WS2 and WS2QC Valve: See Injector Graphs V3010-2R-15B through 2G			
Inlet/ Outlet	WS1.5 Valve: 1.5” Female NPT or BSPT WS2 and WS2QC Valve: 2” Female NPT or BSPT			
Drain Line	WS1.5 Valve: 1.25” Female NPT WS2 and WS2QC Valve: 1.5” Female NPT			
*Distributor Tube Sizing: WS2QC Valve WS1.5and WS2 Valve	Female NPT Inlet & Outlet		Female BSPT Inlet & Outlet	
	2.375” OD (2.0” NPS) 1.90” OD (1.5” NPS)	+2.25” - +2.5” ± 0.5”	63 mm OD 50 mm OD	+57 mm - +64 mm ± 13 mm
Tank Connection	WS1.5 and WS2 Valves: 4”-8UN WS2QC Valve: 4”-8UN, 6” Flange, Side Mount			
Shipping Weight	WS1.5 Valve with Meter: 23 lbs. (11 kg) WS2 Valve with Meter: 30 lbs. (14 kg) WS2QC Valve with Meter: 30 lbs. (14 kg)			
PC Board Memory	Nonvolatile EEPROM (electrically erasable programmable read only memory)			
Compatible with the following typical concentrations of regenerants/chemicals	Sodium chloride, potassium chloride, potassium permanganate, sodium bisulfite, chlorine and chloramines			

*Height is based off the top of tank. Installer to verify proper engagement and allowance for tank expansion

WS1.5

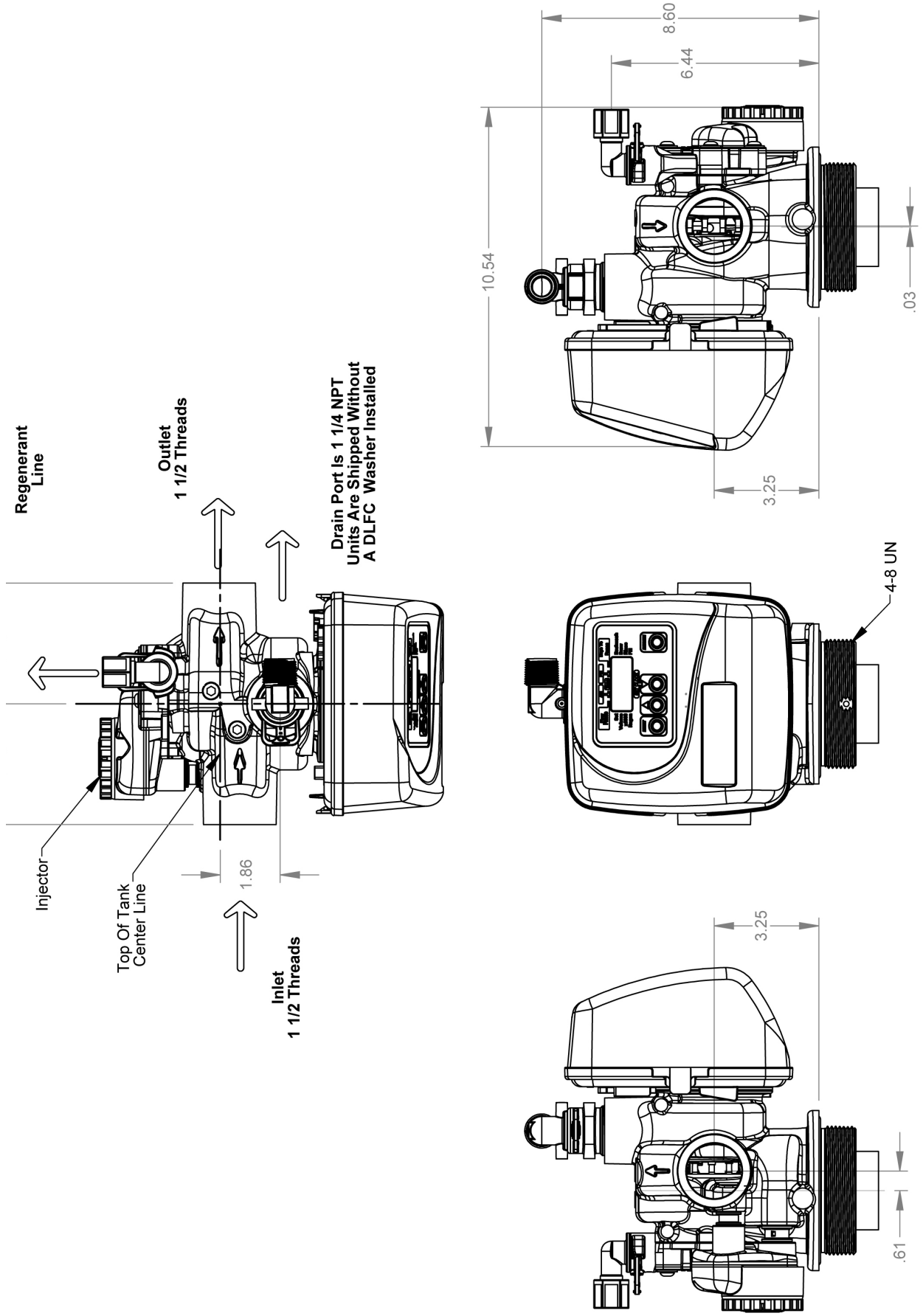
Regenerant Line
Outlet 1 1/2 Threads
Drain Port Is 1 1/4 NPT Units Are Shipped Without A DLFC Washer Installed
Injector
Top Of Tank Center Line
1.86
Inlet 1 1/2 Threads
8.60
6.44
10.54
3.25
.03
4-8 UN
3.25
.61

WS2

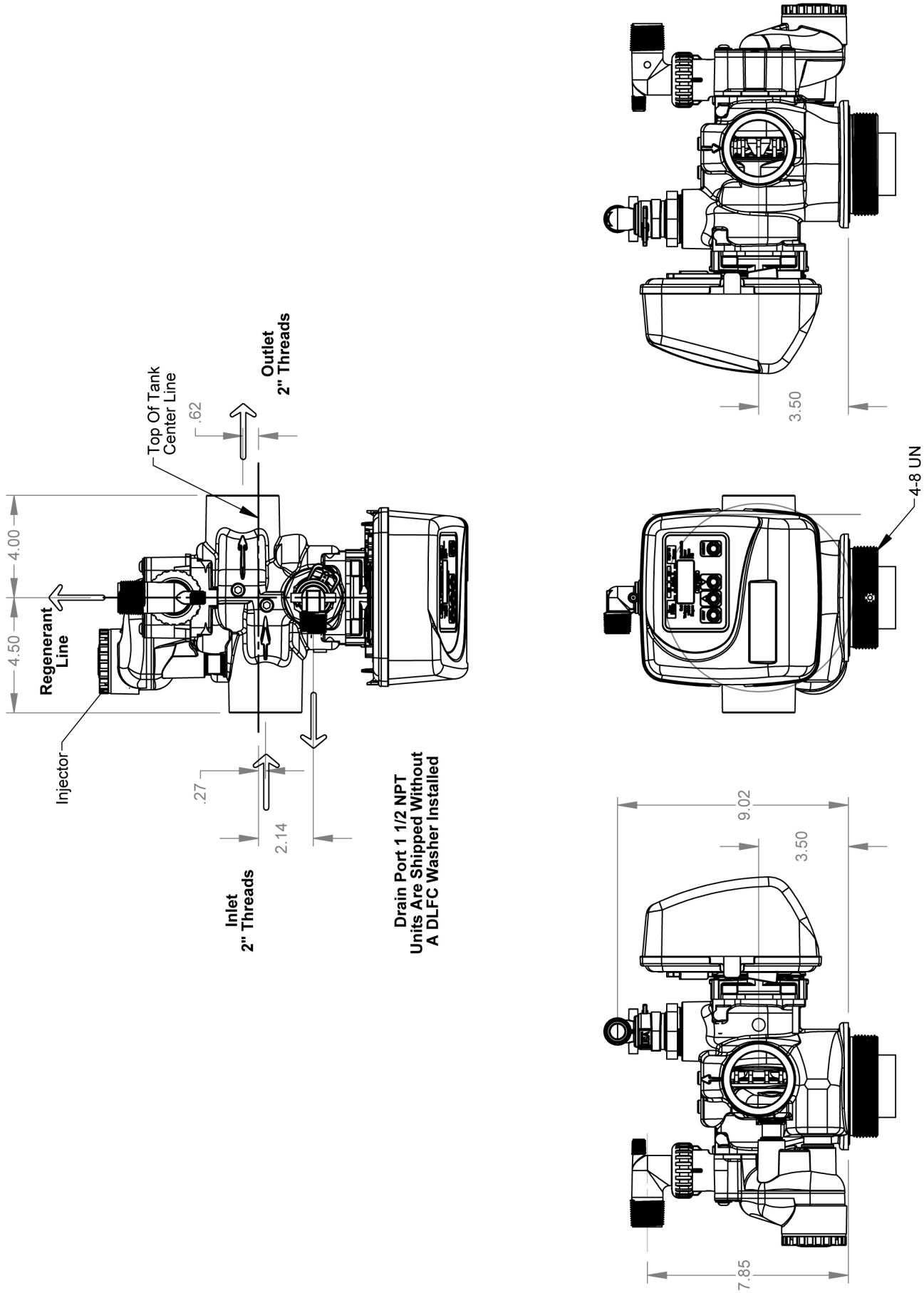
Top Of Tank
Center Line
.62
Outlet
2" Threads
4.00
4.50
Regenerant
Line
Injector
.27
2.14
Inlet
2" Threads
Drain Port 1 1/2 NPT
Units Are Shipped Without
A DLFC Washer Installed
3.50
4-8 UN
9.02
3.50
7.85

WS2 QC

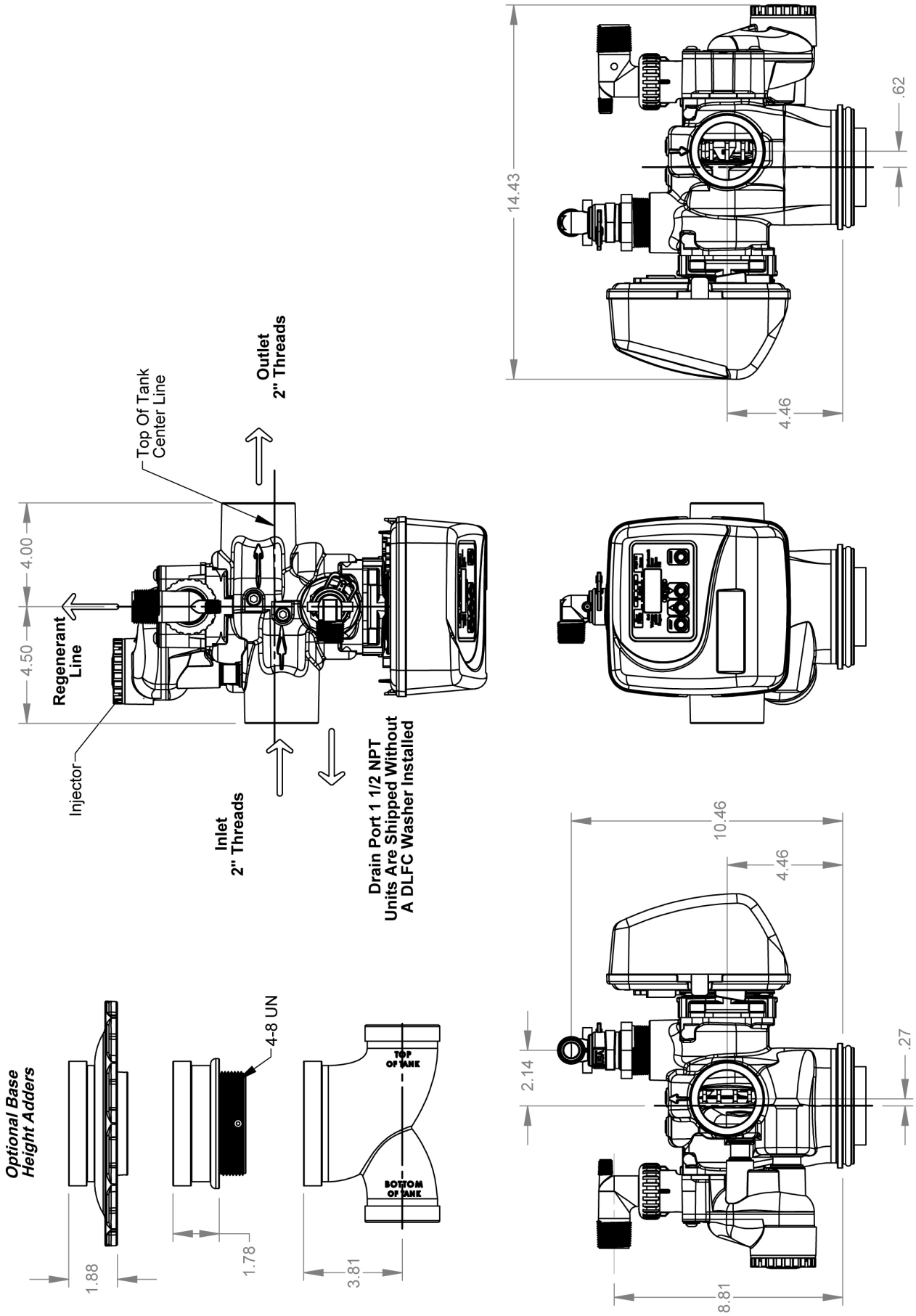
Top Of Tank
Center Line
Outlet
2" Threads
4.00
4.50
Regenerant
Line
Injector
Inlet
2" Threads
Drain Port 1 1/2 NPT
Units Are Shipped Without
A DLFC Washer Installed
14.43
.62
4.46
10.46
4.46
2.14
.27
8.81
Optional Base
Height Adders
4-8 UN
TOP
OF TANK
BOTTOM
OF TANK
1.88
1.78
3.81

Installation

GENERAL INSTALLATION & SERVICE WARNINGS
The control valve and fittings are not designed to support the weight of the system or the plumbing.

Do not use Vaseline, oils, other hydrocarbon lubricants or spray silicone anywhere. A silicone lubricant may be used on black o-rings but is not necessary.

Distributor Tube Pipe Height
for Top Mount WS1.5, WS2 and and WS2 QC control valves

Control Valves	A
WS1.5 and WS2	± ½"
WS2 QC	2 ¼" - 2 ½"

A = Number of inches above the top of the tank for fiberglass tanks. Please verify distributor pipe and pilot o-ring engagement. Installer must determine engagement to be able to allow for tank expansion.

HYDROCARBONS SUCH AS KEROSENE, BENZENE, GASOLINE, ETC., MAY DAMAGE PRODUCTS THAT CONTAIN O-RINGS OR PLASTIC COMPONENTS. EXPOSURE TO SUCH HYDROCARBONS MAY CAUSE THE PRODUCTS TO LEAK. DO NOT USE THE PRODUCT(S) CONTAINED IN THIS DOCUMENT ON WATER SUPPLIES THAT CONTAIN HYDROCARBONS SUCH AS KEROSENE, BENZENE, GASOLINE, ETC.

CLACK WATER METERS SHOULD NOT BE USED AS THE PRIMARY MONITORING DEVICE FOR CRITICAL OR HEALTH EFFECT APPLICATIONS

Teflon tape is recommended to be used on all threads. Do not use pipe dope, as it may break down the plastics in the control valve.

Allow one foot of clearance to service WS1.5 valves and two feet of clearance to service WS2 and WS2QC valves.

The valve will withstand transportation and storage temperatures of -13 ˚F (-25 ˚C) to 131 ˚F (55 ˚C) and for short periods up to 158 ˚F (70 ˚C). If valve has been exposed to freezing conditions let valve warm up to room temperature before running water through it. The valve has been packaged to prevent damage from the effects of normal humidity, vibration and shock.

SITE REQUIREMENTS:

1. The plug in Power Adapter is for dry locations only, and should be connected to an uninterrupted outlet installed within 15 feet (4.57 meters) of the water conditioner. If the Power Adapter cord has not yet been connected to the control valve, remove the control valve cover and the drive bracket, and thread the Power Adapter cord through the hole in the back plate. Reinstall the drive bracket. Weave the cord through the hooks on the right hand side of the drive bracket and connect the end to the four-prong connector on the printed circuit board. Replace the cover, and plug the Power Adapter into an uninterrupted outlet.
2. The tanks should be on a firm, level surface.
3. All plumbing should be done in accordance with local codes.
4. Do not locate unit where it or its connections (including the drain and overflow lines) will ever be subjected to room temperatures below 40° F (4° C).
5. INLET/OUTLET PLUMBING: Connect to a supply line downstream of outdoor spigots. Install an inlet shutoff valve and plumb to the unit's inlet. Installation of a bypass valve is recommended. If using plastic fittings, ground the water conditioner per local electrical codes. Do not install any water conditioner with less than 10 feet of piping between its outlet and the inlet of a water heater. If a water meter is used, install the water meter on the outlet side of the control valve. The turbine assembly may be oriented in any direction, but is usually oriented pointing up to reduce drainage out of the pipe during service.
6. Locate the water conditioner so the distance between the drain and the water conditioner is as short as possible. All units are shipped without a drain line flow control washer. Correctly size the drain line and install an appropriately sized drain line flow control. 1.5" valves are shipped with a ¾" fitting that can be used with the drain line flow controls up to 10 gpm, or an optional 1" fitting can be purchases to be used with drain line flow controls up to 25 gpm. For higher backwash rates, the adapter can be removed and the 1 ¼" NPT threaded drain outlet can be used. For 2" valves the drain outlet is 1.5" NPT threads. Solder joints near the drain must be done prior to connecting the drain line flow control fitting. Leave at least 6" (152.4mm) between the drain line flow control fitting and the solder joints to prevent heat from damaging the flow control. Avoid elevating the drain line above the control valve where possible. Discharge the drain line through an air gap to a receptacle in accordance with local plumbing codes.

   IMPORTANT: Never insert a drain line directly into a drain, sewer line or trap. Always allow and air gap between the drain line and the receptacle to prevent back siphonage.

7. Regenerant tanks should be accessible for easy refilling. If the control valve is to be used to regenerate the water conditioner with brine (saturated salt solution) or other regenerants, use a polyethylene tube to connect the brine valve contained in the regenerant tank to the regenerant port on the control valve. It is recommended the brine valve contain a safety float. The 1.5" control valve's regenerant port has a ½" fitting. Note: ½" tubing that runs longer than 6 feet may restrict draw rates with G and H injectors. A 5/8" fitting is also available.
   The 2" control valve regenerant port has a 1" threaded connection. To ensure acceptable operation of the injectors, use 1" pipe to connect to the brine tank.

   An overflow drain line from the regenerant tank that discharges into an acceptable drain is recommended, as a regenerant overflow could damage furnishings or the building structure. Connect a line to the overflow fitting on the regenerant tank. If an overflow fitting is not already installed on the regenerant tank, install one. Do not elevate the overflow drain line. Discharge the overflow drain line through an air gap to a receptacle in accordance with local plumbing codes.
8. Program the control valve: It is very important to program the control valve for the type of system (e.g. water softener or filter.) Consult your OEM for proper program system settings.
9. The use of resin cleaners in an unvented enclosure is not recommended.

System Startup

1. After installation is completed, turn on the supply water to check for leaks
2. Fully open a cold water faucet downstream of the system
3. Allow water to run until clear
4. Close the cold water faucet
5. Turn off the supply water
6. The system is now ready for startup

Systems With A Regenerant Tank

1. Manually pour enough water into the regenerant tank to reach the top of the air check valve.
2. Press and hold the REGEN button for three seconds until the drive motor starts. Press the REGEN button to advance the unit to the backwash cycle. Wait until the motor stops and the backwash time begins to count down.
3. Open the inlet water supply valve very slowly allowing water to fill the tank in order to expel air. CAUTION: If water flows too rapidly, there will be a loss of media out of the drain.
4. When the water is flowing steadily to the drain without the presence of air, press the REGEN button to advance the control to brine position. Wait until the motor stops and the brine time begins to count down.
5. Fully open the water supply inlet valve. Check that water is being drawn from the regenerant tank & there should be a slow flow to the drain. Allow three minutes for the media bed to settle.
6. Press the REGEN button to advance the unit to the rinse position. Allow water to run to drain for 2 - 3 minutes, or until the drain runs clear.
7. Press the REGEN button to advance to the fill position. Allow water to run into the regenerant tank and prepare it for the next regeneration. Allow the regenerant tank to fill automatically. Systems with a salt grid should see a water level 1 ½" - 2" above the grid.
8. Add salt to the tank, and allow ample time to dissolve salt for the brine solution.
9. SANITIZE! Add a sanitizer to the regenerant tank brine well following dosage recommendations specified by the media manufacturer. Press and hold the REGEN button for three seconds to begin regeneration. Allow the system to complete the regeneration automatically. The system will now be sanitized and producing treated water. Be sure to check for local codes which may also specify sanitization methods.

Systems Without A Regenerant Tank

1. Press and hold the REGEN button for three seconds until the drive motor starts. Press the REGEN button to advance the unit to the backwash cycle. Wait until the motor stops and the backwash time begins to count down.
2. Open the inlet water supply valve very slowly allowing water to fill the tank in order to expel air. CAUTION: If water flows too rapidly, there will be a loss of media out of the drain.
3. When the water is flowing steadily to the drain without the presence of air, fully open the water supply inlet valve.
4. Press the REGEN button again to advance to the rinse position and allow water to run to drain for 2 - 3 minutes or until the drain runs clear.
5. Press the REGEN button to advance to the service position.
6. SANITIZE! Add a sanitizer to the media following dosage recommendations specified by the media manufacturer. Be sure to check for local codes which may also specify sanitization methods.

Service Instructions

When servicing the valve, water may leak from the valve. Water from the valve may create a slip hazard. Clean up water spills.

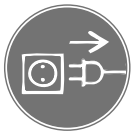

Disconnect from electrical power prior to servicing the valve.

1) Drive Assembly

Disassembly and Inspection:
Remove the valve cover to access the drive assembly.

The drive bracket must be removed to access the drive cap assembly and pistons or the drive gear cover. It is not necessary to remove the PC board from the drive bracket to remove the drive bracket. Disconnect the power source plug (4 pin, black cable) from the PC board prior to disconnecting any other plugs from the PC board. Disconnect and MAV/ AUX drive motors (2 pin, black cable) from the PC board. Disconnect the water meter plug (3 pin, grey cable), located on the far right side of the PC board. Unweave the wires from the side holders. Two tabs on the top of the drive back plate hold the drive bracket in place. Simultaneously lift the two tabs and gently ease the top of the drive bracket towards your body. The lower edge of the drive bracket has two notches that rest on the drive back plate. Lift up and outward on the drive bracket to disengage the notches.

To inspect the drive reduction gears, the drive gear cover needs to be removed. The drive gear cover is held in place on the drive bracket by three clips. The largest of the three clips is always orientated to the bottom of the drive bracket. With the PC board facing up, push in and down on the large clip on the drive gear cover. Handle the cover and the gears carefully so that the gears do not fall off of the pegs in the cover. Replace broken or damaged drive gears. Do not lubricate any of the gears. Avoid getting any foreign matter on the reflective coating because dirt or oils may interfere with pulse counting.

The drive bracket does not need to be removed from the drive plate if the motor needs to be removed. To remove the motor, disconnect the power and motor plugs from the jacks on the PC board. Move the spring clip loop to the right and hold. Rotate the motor at least a ¼ turn in either direction before gently pulling on the wire connectors to remove the motor. Pulling directly on the wires without rotating the motor may break the wires off the motor. Visually inspect the motor for free spinning and remaining brush life (visible through slots on the size of the motor). Check the pinion gear for endplay. If the pinion gear is pushed tight against the motor housing, eliminating endplay, slide it away from the housing so the end of the shaft is flush with the end of the gear.

The PC board can be removed separately from the drive bracket but it is not recommended. Do not attempt to remove the display panel from the PC board. Handle the board by the edges. To remove the PC board from the drive bracket, unplug the power, water meter and motor plugs from the PC board. Lift the middle latch along the top of the drive bracket while pulling outward on the top of the PC board. The drive bracket has two plastic pins that fit into the holes on the lower edge of the PC board. Once the PC board is tilted about 45° from the drive bracket it can be lifted off of these pins. To reinstall the PC board, position the lower edge of the PC board so that the holes in the PC board line up with the plastic pins. Push the top of the PC board towards the valve until it snaps under the middle latch, weave the power and water meter wires into the holders and reconnect the motor, water meter and power plugs.

Reassembly:
If the drive gear cover was removed, reinstall it with the large clip orientated towards the bottom. If all three clips are outside of the gear shroud on the drive bracket the drive gear cover slips easily into place.

To reinstall the drive bracket, seat the bottom of the drive bracket so the notches are engaged at the bottom of the drive back plate. Push the top of the drive bracket towards the two latches. The drive bracket may have to be lifted slightly to let the threaded piston rod pass through the hole in the drive bracket. Maintain a slight engaging force on top of the drive bracket while deflecting the bracket slightly to the left by pressing on the side of the upper right corner. This helps the drive gears mesh with the drive cap assembly. The drive bracket is properly seated when it snaps under the latches on the drive back plate. If resistance is felt before latching, then notches are not fully engaged, the piston rod is not in hole, the wires are jammed between the drive bracket and drive back plate, or the gear is not engaging the drive cap assembly.

Replace the motor if necessary. Do not lubricate the motor or the gears. To reinstall the motor, move the spring clip loop to the right and hold. Gently turn the motor while inserting so that the gear on the motor meshes with the gears under the drive gear cover. Release the spring clip loop and continue to rotate the motor until the motor housing engages the small plastic bulge inside the drive bracket motor retainer. Reconnect the motor plug to the two-pronged jack on the lower left hand side of the PC board. If the motor will not easily engage with the drive gear when reinstalling, lift and slightly rotate the motor before reinserting. Reconnect the power plug.

Replace the valve cover. After completing any valve maintenance, press and hold NEXT and REGEN buttons for 3 seconds or unplug power source jack (black wire) and plug back in. This resets the electronics and establishes the service piston position. The display should flash all wording, then flash the software version and then reset the valve to the service position.

2) Drive Cap Assembly

Disassembly 1.5" Valves

Turn off supply water and relieve system pressure. The drive assembly must be removed to access the drive cap assembly. The drive cap assembly must be removed to access the piston(s). The drive cap assembly is threaded into the control valve body and seals with an o-ring. To remove the drive cap assembly use the special plastic wrench (V3193-02 Figure 1) or insert a ¼" to ½" flat bladed screwdriver into one of the slots around the top 2" of the drive cap assembly so it engages the notches molded into the drive back plate around the top 2" of the piston cavity. See Figure 2. The notches are visible through the holes. Lever the screwdriver so the drive cap assembly turns counter clockwise. Once loosened unscrew the drive cap assembly by hand and pull straight out.

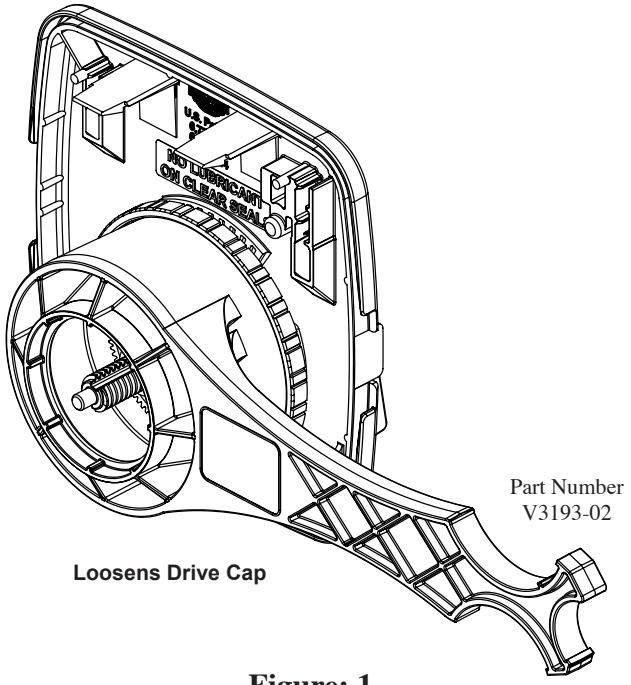

Figure: 1

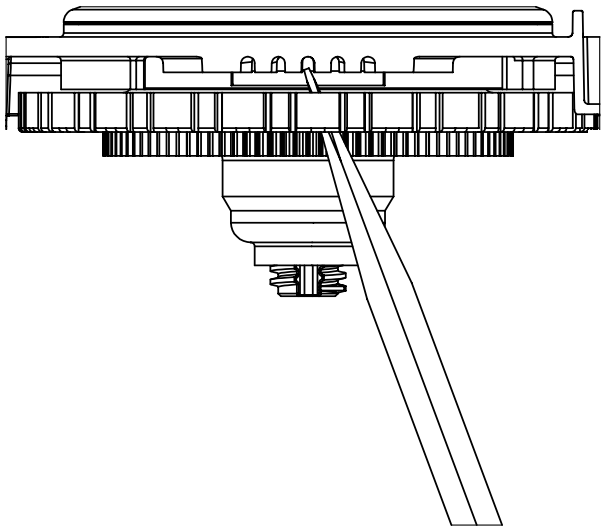

Figure: 2

Disassembly, 2" Valves

After removing the bracket assembly the drive back plate can be removed by squeezing the 2 locking tabs (located at 3 and 9 o-clock around the white gear) and rotating the back plate counter clockwise. The four ¼-20 screws can then be removed and the drive cap pulled straight back out of the valve. Turning the main gear counter clockwise drives the piston in and may aid in pushing out the cap.

Inspection

The drive cap assembly contains the drive cap, the main drive gear, drive cap spline, piston rod and various other parts that should not be dissembled in the field. Visually inspect the drive cap for damage and free operation of the gear and threaded rod. The only replaceable part on the drive cap assembly is the o-ring.

3) Main Piston and Regenerant Piston

Disassembly and Inspection

Attached to the drive cap assembly is the main piston and depending on the configuration, a regenerant piston. The regenerant piston (the small diameter one behind the main piston) is removed from the main piston by unsnapping it from its disassembly latch. To remove the main piston fully extend the piston rod and then unsnap the main piston from its latch by pressing on the side with the number. Chemically clean the piston in dilute sodium bisulfite or vinegar, or replace the them. The main piston is teflon coated. If the teflon coating is abraided, replace the main piston. For piston identification, refer to table.

Reassembly

Reattach the main piston to the drive cap assembly. Reattach the regenerant piston (if needed) to the main piston. Reinsert the drive cap assembly and piston into the spacer stack assembly and hand tighten the drive cap assembly. Continue to tighten the drive cap assembly until the backside of the drive cap bottoms out flush with the casting or the black o-ring on the spacer stack assembly is no longer visible through the drain port. Excessive force can break the notches molded into the drive back plate. Make certain that the main drive gear still turns freely. The exact position of the piston is not important as long as the main drive gear turns freely.

Reattach the drive assembly to the control valve and connect all plugs. After completing any valve maintenance, press and hold NEXT and REGEN buttons for 3 seconds or unplug power source jack (4 pin, black cable) and plug back in. This resets the electronics and establishes the service piston position. The display should flash all wording, then flash the software version and then reset the valve to the service position.

4) Spacer Stack Assembly

Disassembly and Inspection

To access the spacer stack assembly remove the drive assembly, drive cap assembly and piston. The spacer stack assembly can then be pulled straight out. Inspect the black o-rings and inner seals for wear or damage, replace the entire stack if necessary. Do not disassemble the stack.

The spacer stack assembly may be chemically cleaned (dilute sodium bisulfite or vinegar) or wiped with a soft cloth.
For 2” stack identification, refer to table.

Reassembly

The spacer stack assembly can be pushed into the control valve body bore by hand. The assembly is properly seated when at least four threads are exposed (approximately 5/8”). Do not force the spacer stack assembly in. The control valve body bore interior can be lubricated with silicone to allow for easy insertion of the entire stack.

Reattach the drive cap assembly and piston(s) and the drive assembly.

After completing any valve maintenance, press and hold NEXT and REGEN buttons for 3 seconds or unplug the power source jack (4 pin, black cable) and plug back in. This resets the electronics and establishes the service piston position. The display should flash all wording, then flash the software version and then reset the valve to the service position.

Downflow/Backwash or Upflow Changes

	1.5"		2" and 2" QC	
	Downflow/Backwash	Upflow	Downflow/Backwash	Upflow
Main Piston	V3407 (amber)	V4042 (black)	V3725 (amber)	V4059 (black)
Stack Assembly	V3430-01 (black)	V3430-01 (black)	V3729 (black)	V3729-01 (black and grey)
Feed Tube	V3968 (black)	V3968-01 (grey)	V3730 (black)	V3730-01 (grey)
Draw Tube	V3969 (black)	V3969-01 (grey)	V3731 (black)	V3731-01 (grey)

5) Injector Cap, Screen, Injector Plug and Injector
Disassembly and Inspection

The injector can be accessed at the back of the valve by removing the threaded injector cap. The cap is removed by using the V3193-02 service wrench (figure 1).
Once the cap is removed:
• WS1.5 valve can use the bottom threaded edge of the injector cap at an angle to pry out the injector
• WS2/WS2QC valves can use the open end of the V3193-02 service wrench at and angle to pry out the injector
An injector consists of a throat and nozzle. It can be chemically cleaned with vinegar or dilute sodium bisulfate. The holes can be blown out by air. Sharp objects, which can score the plastic, should not be used to clean the injector. Scoring the the injector or increasing the diameter of the injector hole could change the operating parameters of the injector.

If the WS1.5 valve does not use a regenerant the injector plug should not need to be cleaned, just verify that it has both o-rings on the plug and that it is fully seated.

Reassembly
Press injector into its bore hole and press until seated all the way down. Replace the injector cap.

6) Refill Flow Control Assembly or Refill Port Plug
Disassembly and Inspection
To clean or replace the refill flow control, remove the nut (WS2) or pull out the locking clip (WS1.5 valves) and then pull the fitting straight out. Remove the flow control retainer. The flow control can be removed by prying upward through the side slots of the retainer with a small blade flat screwdriver, being careful not to mar the plastic seat.

Chemically clean the flow control or the flow control retainer using dilute sodium bisulfite or vinegar. **Do not clean with abrasive methods.** If necessary, replace the flow control, o-ring on the flow control retainer, or the o-ring on the fitting.

Reassembly
Insert the flow control into its seat, confirming correct flow control orientation. Reseat the flow control retainer and reassemble the fitting (see diagram in the exploded view section).

Do not use Vaseline, oils, or other unacceptable lubricants on o-rings. A silicone lubricant may be used on the o-ring on the elbow or the retainer, but not on the flow control or its seat.

Refill port plugs should not need to be serviced. O-rings may be replaced if necessary.

7) Regenerant Body
Disassembly and Inspection
Turn off supply water & relieve system pressure.
The regenerant body would typically only be removed for servicing of the injector screen (not applicable to 2” valves). Removing the injector cap can allow much of the contained water to drained before removing the body. Remove the (4) ¼-20 screws, the body can then be pulled straight back off the main body taking care to not lose the o-ring between the regenerant & main body. The injector screen is installed inside the plastic body behind the injector feed tube. The injector screen can be pushed out from the half round hole feature behind the injector cap. For injector feed and draw tube identification, refer to table.

Reassembly
Insert the injector feed and draw tubes into the main body, bottoming them out in their bores. Install the injector screen in the 1.5 regenerant body, the small hole in the end of the screen will nest around a feature in the plastic body allowing the large end to be flush with a step in the tube bore. Confirm the placement of the o-ring on the flange of the plastic body then press the regenerant body straight onto the main body, assuring the o-rings engages the bore in the main body. Install & tighten the (4)1/4-20 screws. The lower injector o-ring engages the ID of the injector tube which may push the injector out of position when reinstalling the regenerant body. Verify the injector is seated all the way down into its bore, then reinstall the injector cap.

8) Drain Line Flow Control

Disassembly and Inspection

Depending on the flow control installed on the unit, remove the red plastic retaining clip (plastic flow control) or the (4) screws (stainless steel flow control) to expose the flow control and retainer. The flow controls can be removed by flexing the washer with a small screwdriver being careful not to mar the plastic seat. The flow control and retainer may be chemically cleaned using dilute sodium bisulfite or vinegar, do not clean with abrasive methods.

Reassembly

Insert the flow washers back into their respective bores, confirming correct flow control orientation (see diagram in the exploded view section). Place back into the housing and reassemble the housing /fitting. Do not use Vasoline, oils or other unacceptable lubricants on o-rings. A silicone lubricant may be used on the o-ring of the elbow or the retainer, but not on the flow control or its seat.

Troubleshooting Procedures

Problem	Possible Cause	Solution
1. No Display on PC Board	a. No power at electric outlet	a. Repair outlet or use working outlet
	b. Control valve Power Adapter not plugged into outlet or power cord end not connected to PC board connection	b. Plug Power Adapter into outlet or connect power cord end to PC Board connection
	c. Improper power supply	c. Verify proper voltage is being delivered to PC Board
	d. Defective Power Adapter	d. Replace Power Adapter
	e. Defective PC Board	e. Replace PC Board
2. PC Board does not display correct time of day	a. Power Adapter plugged into electric outlet controlled by light switch	a. Use uninterrupted outlet
	b. Tripped breaker switch and/or tripped GFI	b. Reset breaker switch and/ or GFI switch
	c. Power outage	c. Reset time of day. If PC Board has battery back up present the battery may be depleted. See Front Cover and Drive Assembly drawing for instructions.
	d. Defective PC Board	d. Replace PC Board
3. Display does not indicate that water is flowing. Refer to user instructions for how the display indicates water is flowing	a. Bypass valve in bypass position	a. Turn bypass handles to place bypass in service position
	b. Meter is not connected to meter connection on PC Board	b. Connect meter to three pin connection labeled METER on PC Board
	c. Restricted/ stalled meter turbine	c. Remove meter and check for rotation or foreign material
	d. Meter wire not installed securely into three pin connector	d. Verify meter cable wires are installed securely into three pin connector labeled METER
	e. Defective meter	e. Replace meter
	f. Defective PC Board	f. Replace PC Board
4. Control valve regenerates at wrong time of day	a. Power outage	a. Reset time of day. If PC Board has battery back up present the battery may be depleted. See Front Cover and Drive Assembly drawing for instructions.
	b. Time of day not set correctly	b. Reset to correct time of day
	c. Time of regeneration set incorrectly	c. Reset regeneration time
	d. Control valve set at ”on 0” (immediate regeneration)	d. Check programming setting and reset to NORMAL (for a delayed regen time)
	e. Control valve set at ”NORMAL + on 0” (delayed and/ or immediate)	e. Check programming setting and reset to NORMAL (for a delayed regen time)
5. Time of day flashes on and off	a. Power outage	a. Reset time of day. If PC Board has battery back up present the battery may be depleted. See Front Cover and Drive Assembly drawing for instructions.
6. Control valve does not regenerate automatically when the REGEN button is depressed and held.	a. Broken drive gear or drive cap assembly	a. Replace drive gear or drive cap assembly
	b. Broken Piston Rod	b. Replace piston rod
	c. Defective PC Board	c. Defective PC Board
7. Control valve does not regenerate automatically but **does** when the REGEN button is depressed and held.	a. Bypass valve in bypass position	a. Turn bypass handles to place bypass in service position
	b. Meter is not connected to meter connection on PC Board	b. Connect meter to three pin connection labeled METER on PC Board
	c. Restricted/ stalled meter turbine	c. Remove meter and check for rotation or foreign material
	d. Incorrect programming	d. Check for programming error
	e. Meter wire not installed securely into three pin connector	e. Verify meter cable wires are installed securely into three pin connector labeled METER
	f. Defective meter	f. Replace meter
	g. Defective PC Board	g. Replace PC Board

Problem	Possible Cause	Solution
8. Hard or untreated water is being delivered	a. Bypass valve is open or faulty	a. Fully close bypass valve or replace
	b. Media is exhausted due to high water usage	b. Check program settings or diagnostics for abnormal water usage
	c. Meter not registering	c. Remove meter and check for rotation or foreign material
	d. Water quality fluctuation	d. Test water and adjust program values accordingly
	e. No regenerant or low level of regenerant in regenerant tank	e. Add proper regenerant to tank
	f. Control fails to draw in regenerant	f. Refer to Trouble Shooting Guide number 12
	g. Insufficient regenerant level in regenerant tank	g. Check refill setting in programming. Check refill flow control for restrictions or debris and clean or replace
	h. Damaged seal/stack assembly	h. Replace seal/stack assembly
	i. Control valve body type and piston type mix matched	i. Verify proper control valve body type and piston type match
	j. Fouled media bed	j. Replace media bed
9. Control valve uses too much regenerant	a. Improper refill setting	a. Check refill setting
	b. Improper program settings	b. Check program setting to make sure they are specific to the water quality and application needs
	c. Control valve regenerates frequently	c. Check for leaking fixtures that may be exhausting capacity or system is undersized
10. Residual regenerant being delivered to service	a. Low water pressure	a. Check incoming water pressure – water pressure must remain at minimum of 25 psi
	b. Incorrect injector size	b. Replace injector with correct size for the application
	c. Restricted drain line	c. Check drain line for restrictions or debris and clean
11. Excessive water in regenerant tank	a. Improper program settings	a. Check refill setting
	b. Plugged injector	b. Remove injector and clean or replace
	c. Drive cap assembly not tightened in properly	c. Re-tighten the drive cap assembly
	d. Damaged seal/ stack assembly	d. Replace seal/ stack
	e. Restricted or kinked drain line	e. Check drain line for restrictions or debris and or un-kink drain line
	f. Plugged backwash flow controller	f. Remove backwash flow controller and clean or replace
	g. Missing refill flow controller	g. Replace refill flow controller
12. Control valve fails to draw in regenerant	a. Injector is plugged	a. Remove injector and clean or replace
	b. Faulty regenerant piston	b. Replace regenerant piston
	c. Regenerant line connection leak	c. Inspect regenerant line for air leak
	d. Drain line restriction or debris cause excess back pressure	d. Inspect drain line and clean to correct restriction
	e. Drain line too long or too high	e. Shorten length and or height
	f. Low water pressure	f. Check incoming water pressure – water pressure must remain at minimum of 25 psi
13. Water running to drain	a. Power outage during regeneration	a. Upon power being restored control will finish the remaining regeneration time. Reset time of day.
	b. Damaged seal/ stack assembly	b. Replace seal/ stack assembly
	c. Piston assembly failure	c. Replace piston assembly
	d. Drive cap assembly not tightened in properly	d. Re-tighten the drive cap assembly

Problem	Possible Cause	Solution
14. E1, Err – 1001, Err – 101 = Control unable to sense motor movement	a. Motor not inserted full to engage pinion, motor wires broken or disconnected	a. Disconnect power, make sure motor is fully engaged, check for broken wires, make sure two pin connector on motor is connected to the two pin connection on the PC Board labeled MOTOR. Press NEXT and REGEN buttons for 3 seconds to resynchronize software with piston position or disconnect power supply from PC Board for 5 seconds and then reconnect.
	b. PC Board not properly snapped into drive bracket	b. Properly snap PC Board into drive bracket and then Press NEXT and REGEN buttons for 3 seconds to resynchronize software with piston position or disconnect power supply from PC Board for 5 seconds and then reconnect.
	c. Missing reduction gears	c. Replace missing gears
15. E2, Err – 1002, Err – 102 = Control valve motor ran too short and was unable to find the next cycle position and stalled	a. Foreign material is lodged in control valve	a. Open up control valve and pull out piston assembly and seal/ stack assembly for inspection. Press NEXT and REGEN buttons for 3 seconds to resynchronize software with piston position or disconnect power supply from PC Board for 5 seconds and then reconnect.
	b. Mechanical binding	b. Check piston and seal/ stack assembly, check reduction gears, check drive bracket and main drive gear interface. Press NEXT and REGEN buttons for 3 seconds to resynchronize software with piston position or disconnect power supply from PC Board for 5 seconds and then reconnect.
	c. Main drive gear too tight	c. Loosen main drive gear. Press NEXT and REGEN buttons for 3 seconds to resynchronize software with piston position or disconnect power supply from PC Board for 5 seconds and then reconnect.
	d. Improper voltage being delivered to PC Board	d. Verify that proper voltage is being supplied. Press NEXT and REGEN buttons for 3 seconds to resynchronize software with piston position or disconnect power supply from PC Board for 5 seconds and then reconnect.
16. E3, Err – 1003, Err – 103 = Control valve motor ran too long and was unable to find the next cycle position	a. Motor failure during a regeneration	a. Check motor connections then Press NEXT and REGEN buttons for 3 seconds to resynchronize software with piston position or disconnect power supply from PC Board for 5 seconds and then reconnect.
	b. Foreign matter built up on piston and stack assemblies creating friction and drag enough to time out motor	b. Replace piston and stack assemblies. Press NEXT and REGEN buttons for 3 seconds to resynchronize software with piston position or disconnect power supply from PC Board for 5 seconds and then reconnect.
	c. Drive bracket not snapped in properly and out enough that reduction gears and drive gear do not interface	c. Snap drive bracket in properly then Press NEXT and REGEN buttons for 3 seconds to resynchronize software with piston position or disconnect power supply from PC Board for 5 seconds and then reconnect.
17. Err – 1004, Err – 104 = Control valve motor ran too long and timed out trying to reach home position	a. Drive bracket not snapped in properly and out enough that reduction gears and drive gear do not interface	a. Snap drive bracket in properly then Press NEXT and REGEN buttons for 3 seconds to resynchronize software with piston position or disconnect power supply from PC Board for 5 seconds and then reconnect.

Problem	Possible Cause	Solution
18. Err -1006, Err – 106, Err - 116 = MAV/ SEPS/ NHBP/ AUX MAV valve motor ran too long and unable to find the proper park position Motorized Alternating Valve = MAV Separate Source = SEPS No Hard Water Bypass = NHBP Auxiliary MAV = AUX MAV	a. Control valve programmed for ALT A or b, nHbP, SEPS, or AUX MAV with out having a MAV or NHBP valve attached to operate that function	a. Press NEXT and REGEN buttons for 3 seconds to resynchronize software with piston position or disconnect power supply from PC Board for 5 seconds and then reconnect. Then re-program valve to proper setting.
	b. MAV/ NHBP motor wire not connected to PC Board	b. Connect MAV/ NHBP motor to PC Board two pin connection labeled DRIVE. Press NEXT and REGEN buttons for 3 seconds to resynchronize software with piston position or disconnect power supply from PC Board for 5 seconds and then reconnect.
	c. MAV/ NHBP motor not fully engaged with reduction gears	c. Properly insert motor into casing, do not force into casing Press NEXT and REGEN buttons for 3 seconds to resynchronize software with piston position or disconnect power supply from PC Board for 5 seconds and then reconnect.
	d. Foreign matter built up on piston and stack assemblies creating friction and drag enough to time out motor	d. Replace piston and stack assemblies. Press NEXT and REGEN buttons for 3 seconds to resynchronize software with piston position or disconnect power supply from PC Board for 5 seconds and then reconnect.
19. Err – 1007, Err – 107, Err - 117 = MAV/ SEPS/ NHBP/ AUX MAV valve motor ran too short (stalled) while looking for proper park position Motorized Alternating Valve = MAV Separate Source = SEPS No Hard Water Bypass = NHBP Auxiliary MAV = AUX MAV	a. Foreign material is lodged in MAV/ NHBP valve	a. Open up MAV/ NHBP valve and check piston and seal/ stack assembly for foreign material. Press NEXT and REGEN buttons for 3 seconds to resynchronize software with piston position or disconnect power supply from PC Board for 5 seconds and then reconnect.
	b. Mechanical binding	b. Check piston and seal/ stack assembly, check reduction gears, drive gear interface, and check MAV/ NHBP black drive pinion on motor for being jammed into motor body. Press NEXT and REGEN buttons for 3 seconds to resynchronize software with piston position or disconnect power supply from PC Board for 5 seconds and then reconnect.

WS1.5 Control Valve Cycle Positions

SERVICE

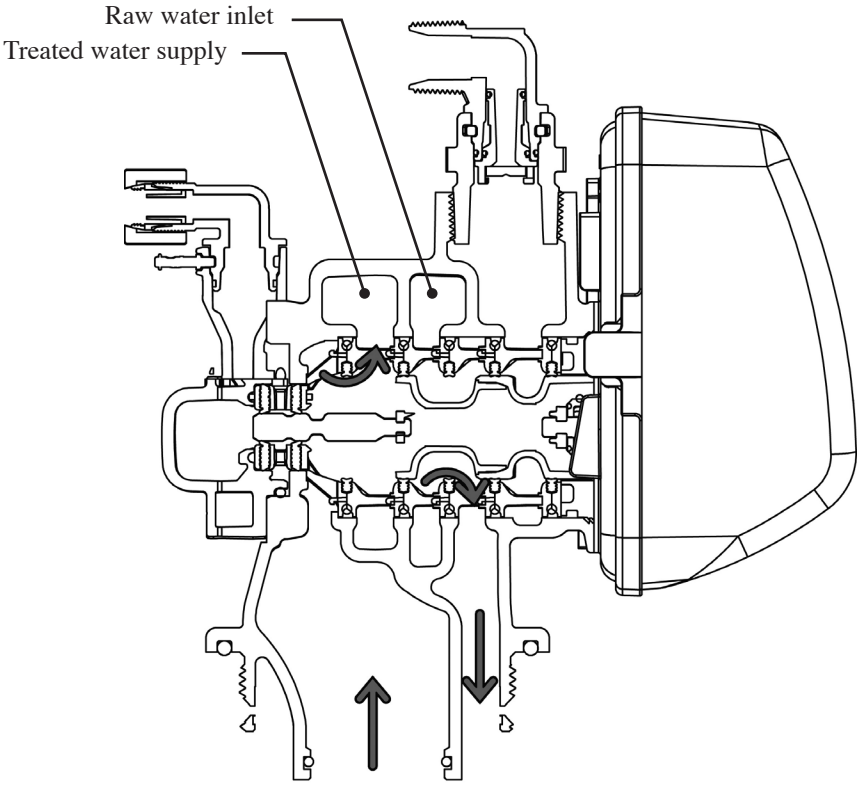

BACKWASH

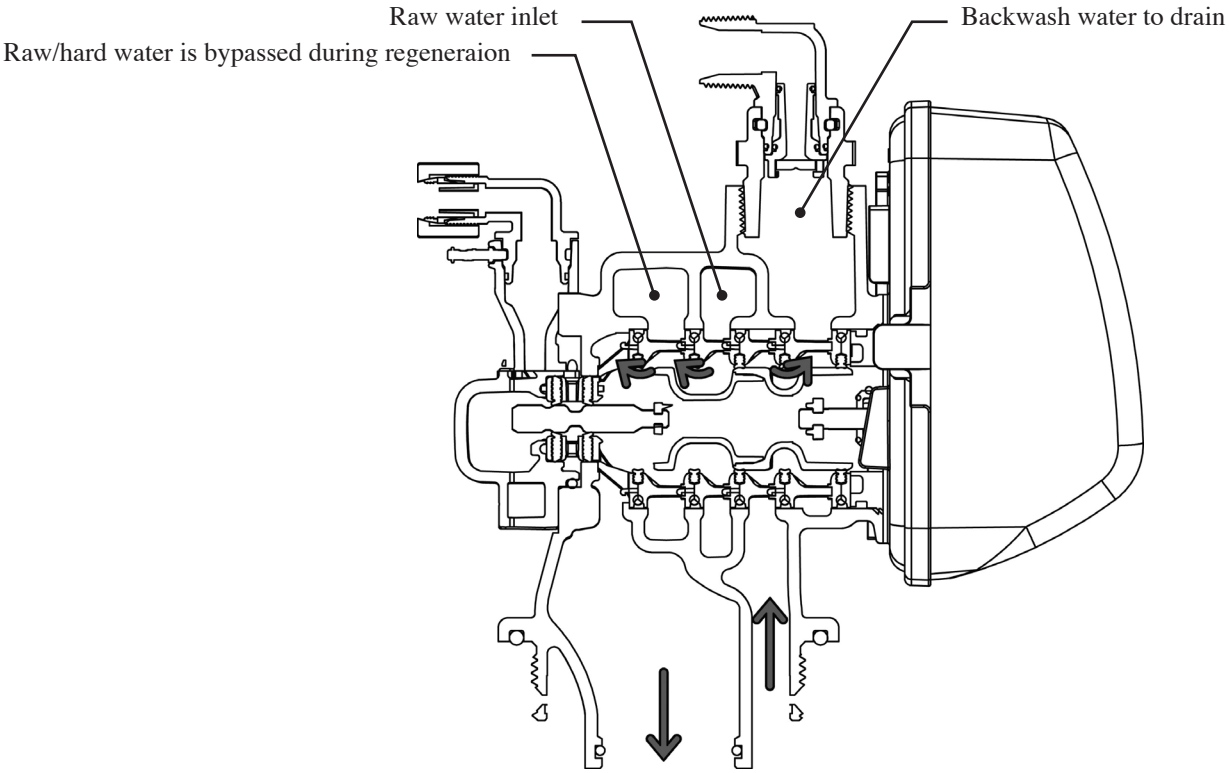

WS1.5 Control Valve Cycle Positions

DOWNFLOW BRINE

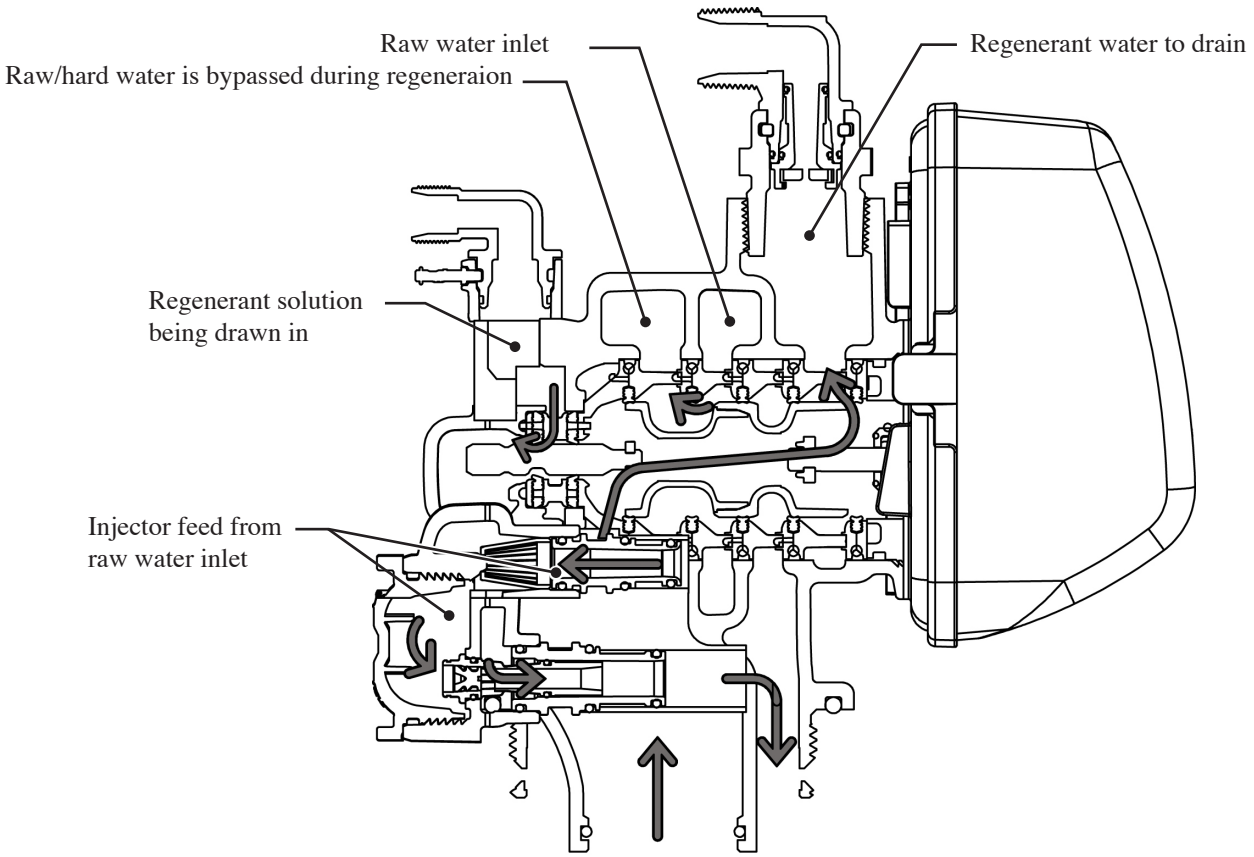

UPFLOW BRINE

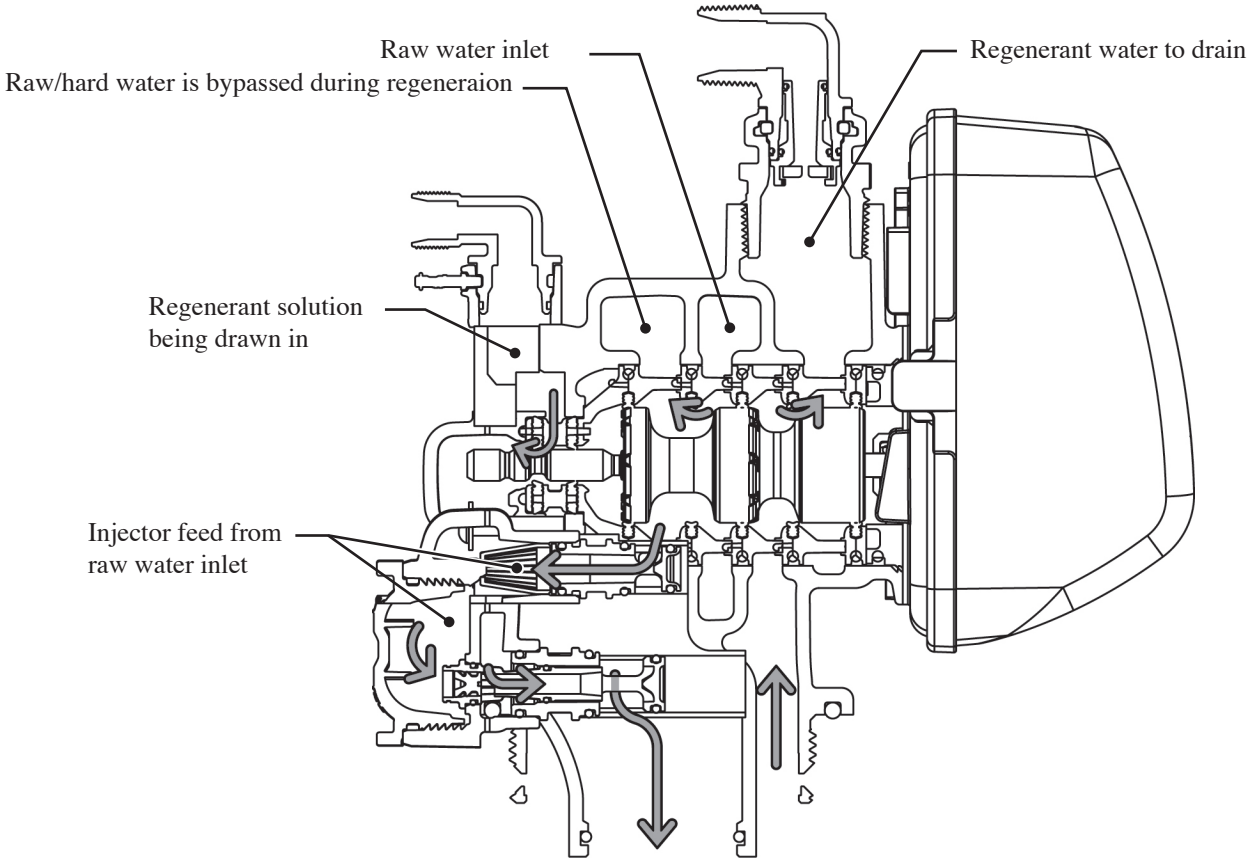

WS1.5 Control Valve Cycle Positions

RINSE

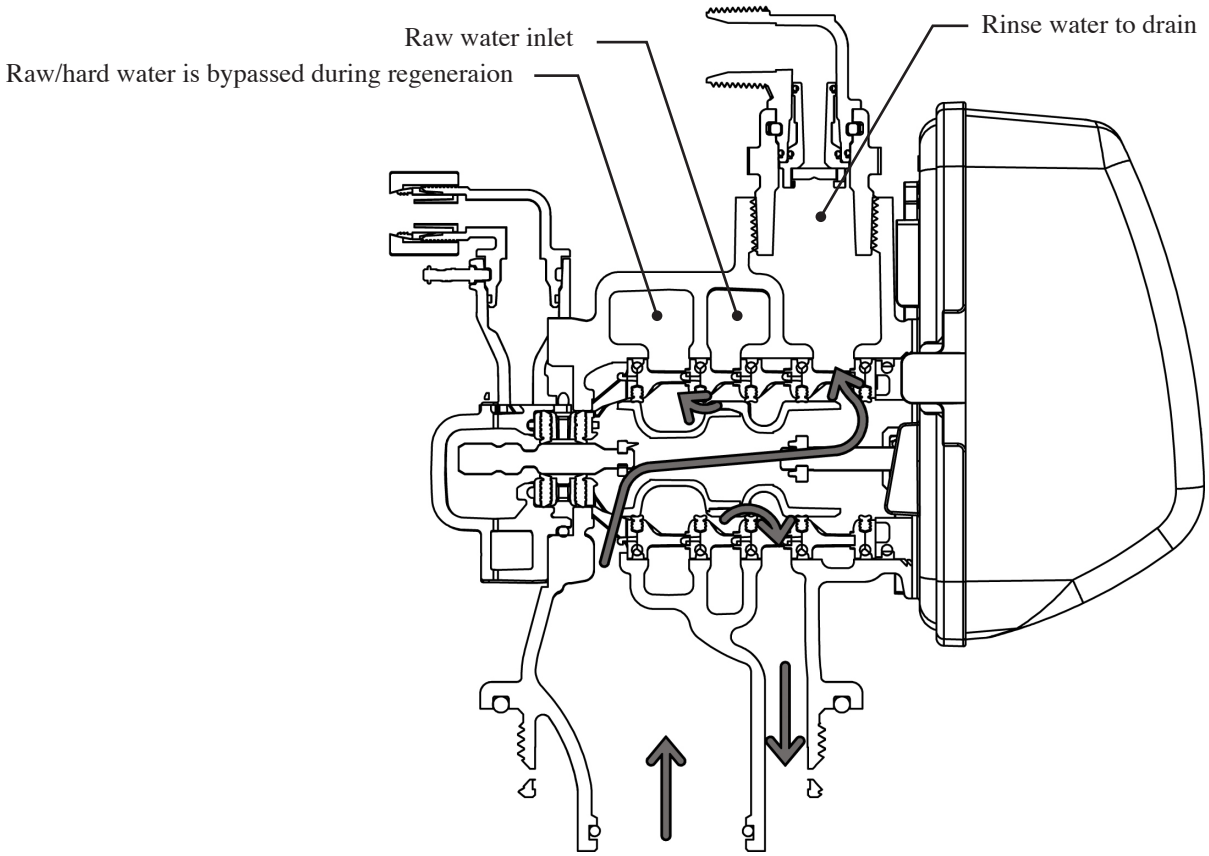

TREATED WATER REFILL

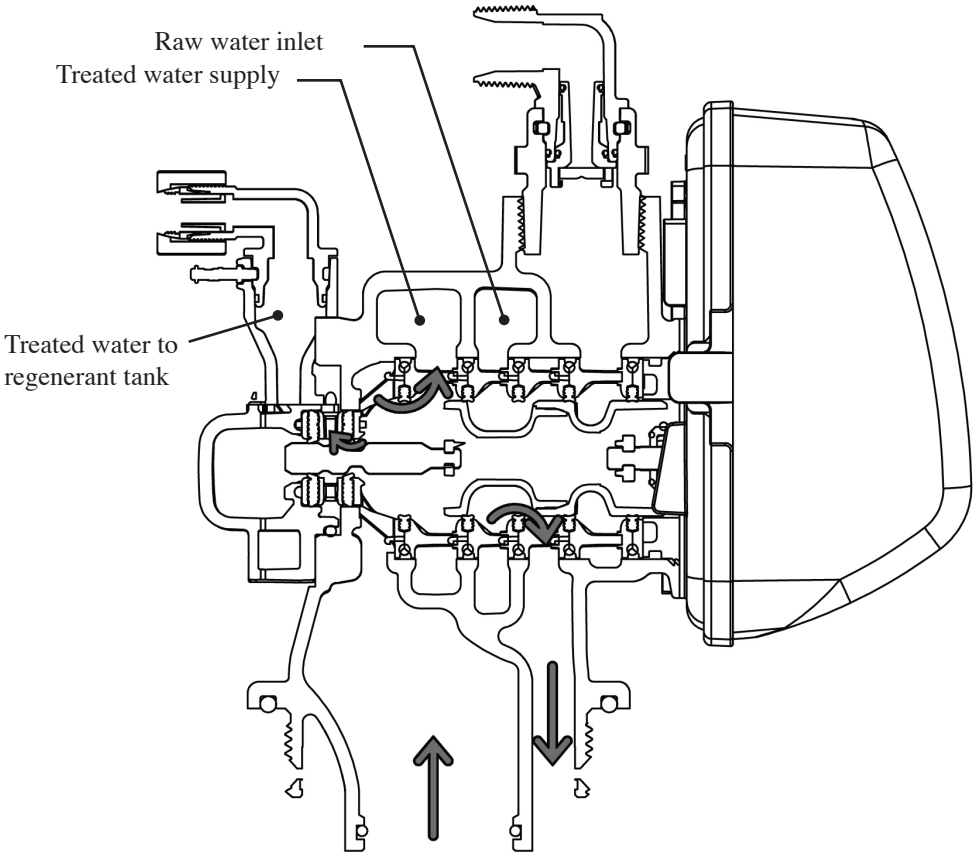

WS2 Control Valve Cycle Positions

SERVICE

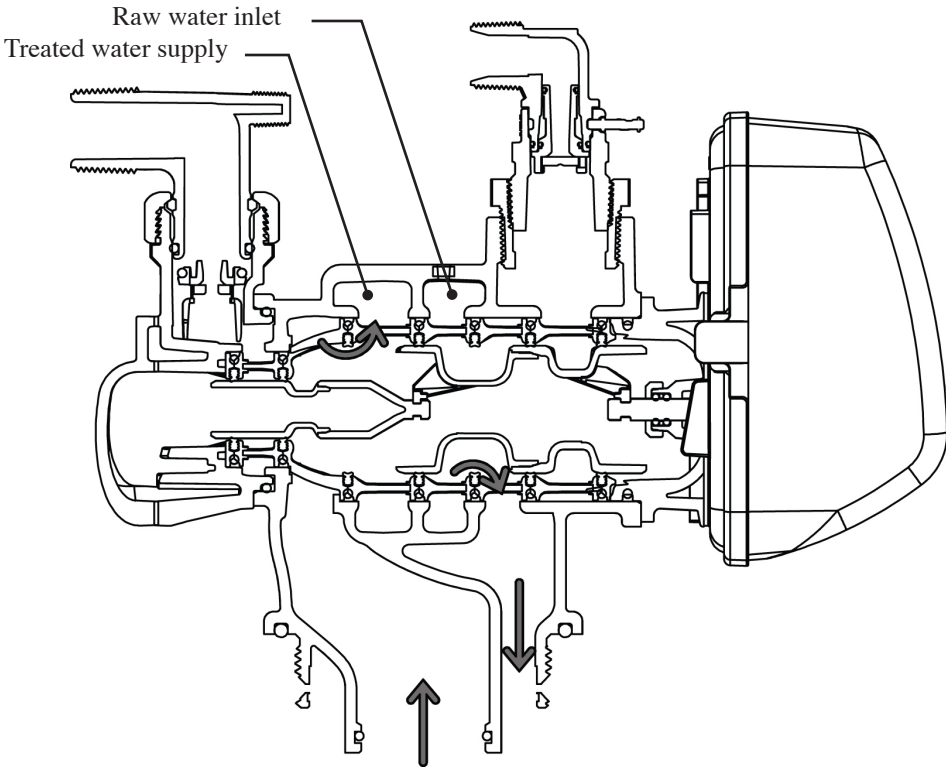

BACKWASH

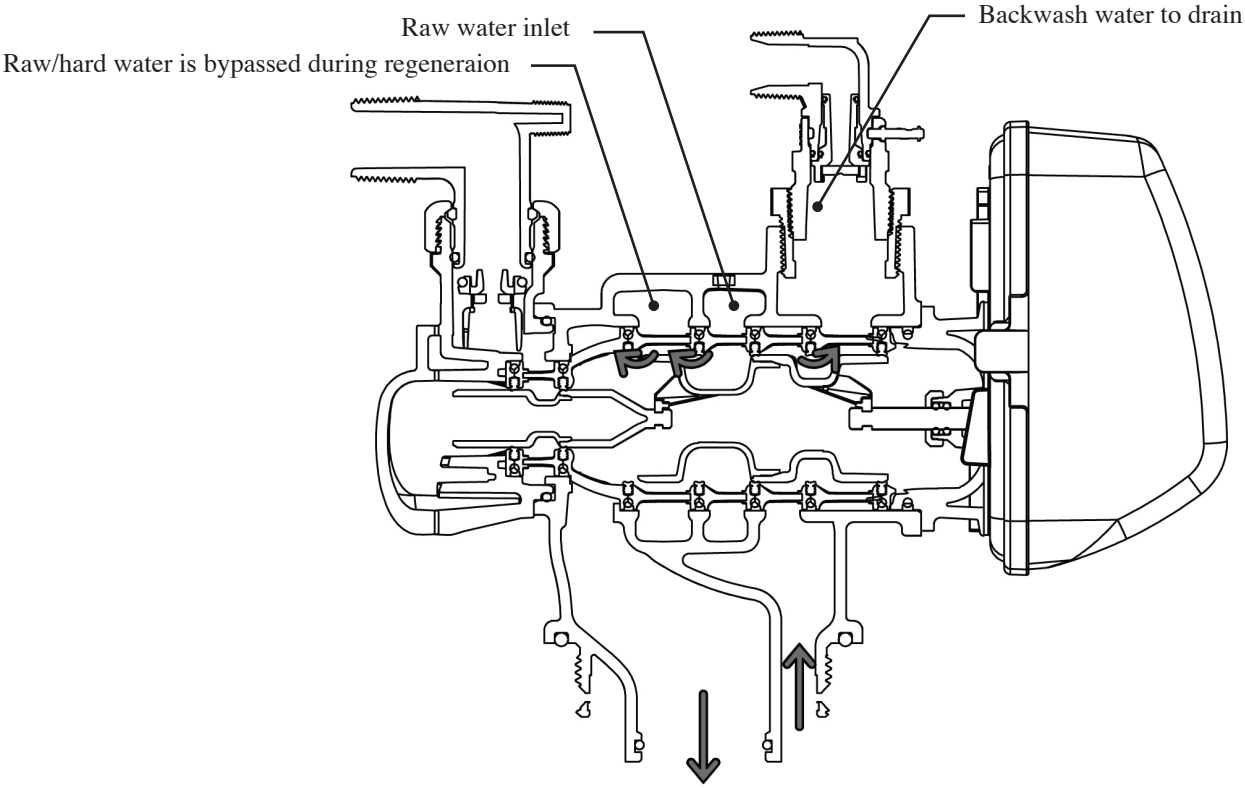

WS2 Control Valve Cycle Positions

DOWNFLOW BRINE

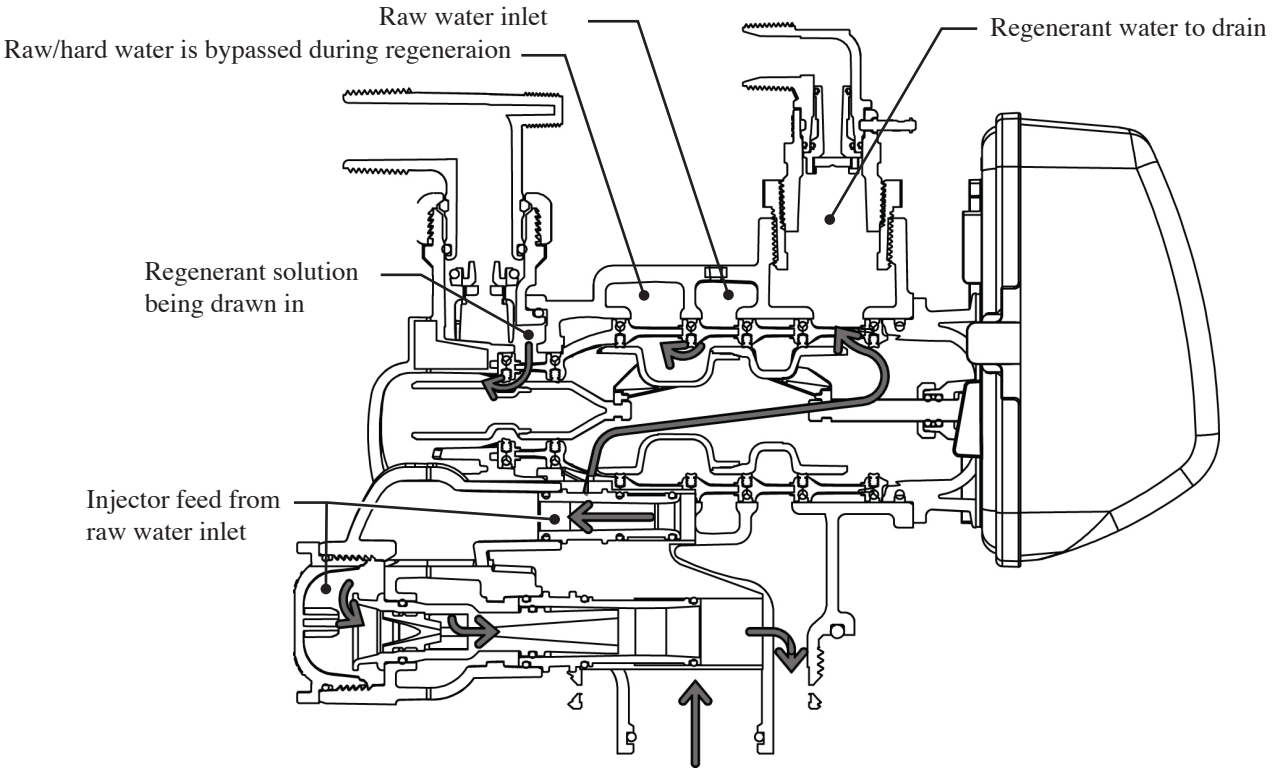

UPFLOW BRINE

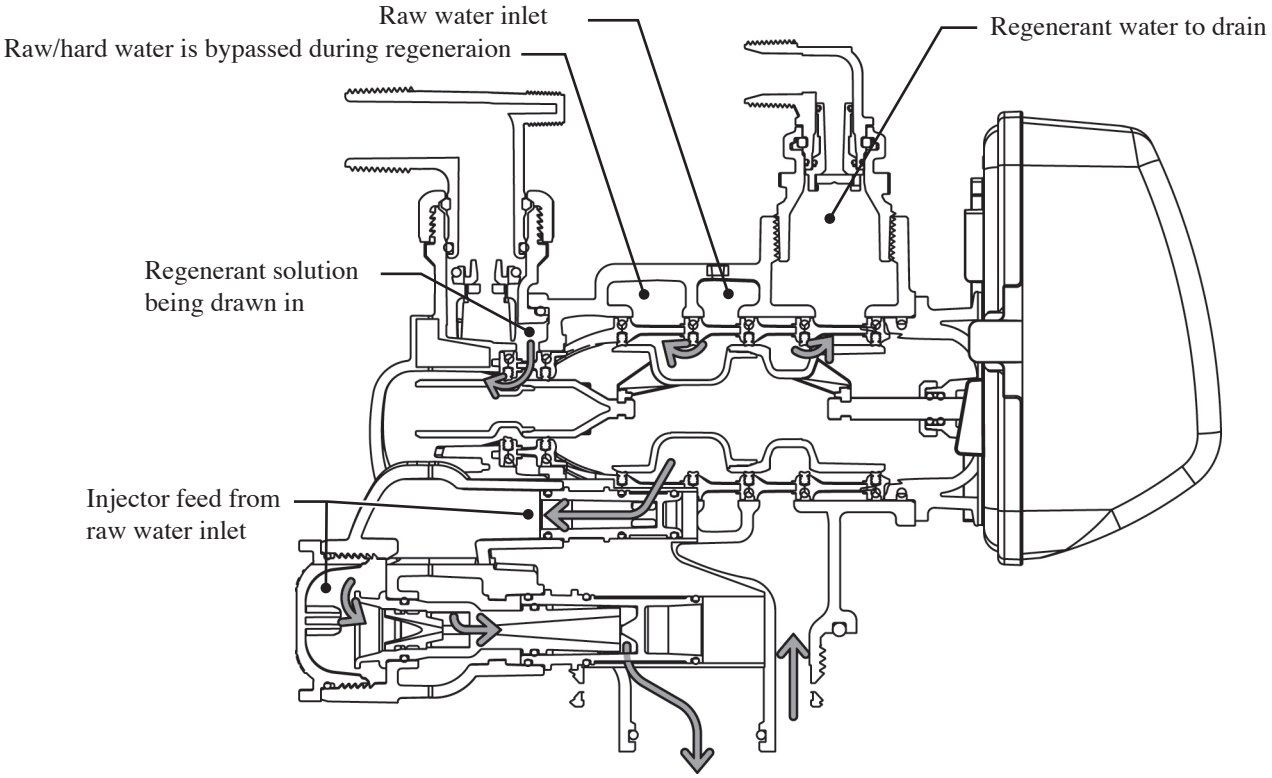

WS2 Control Valve Cycle Positions

RINSE

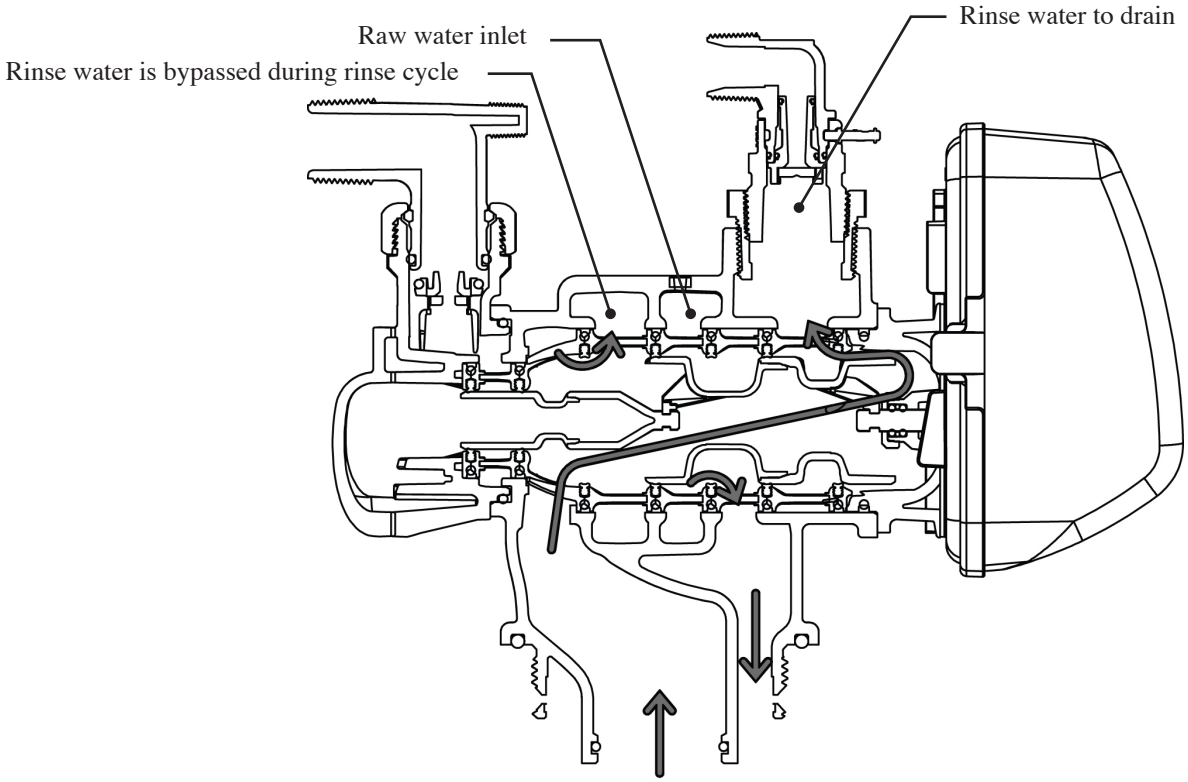

TREATED WATER REFILL

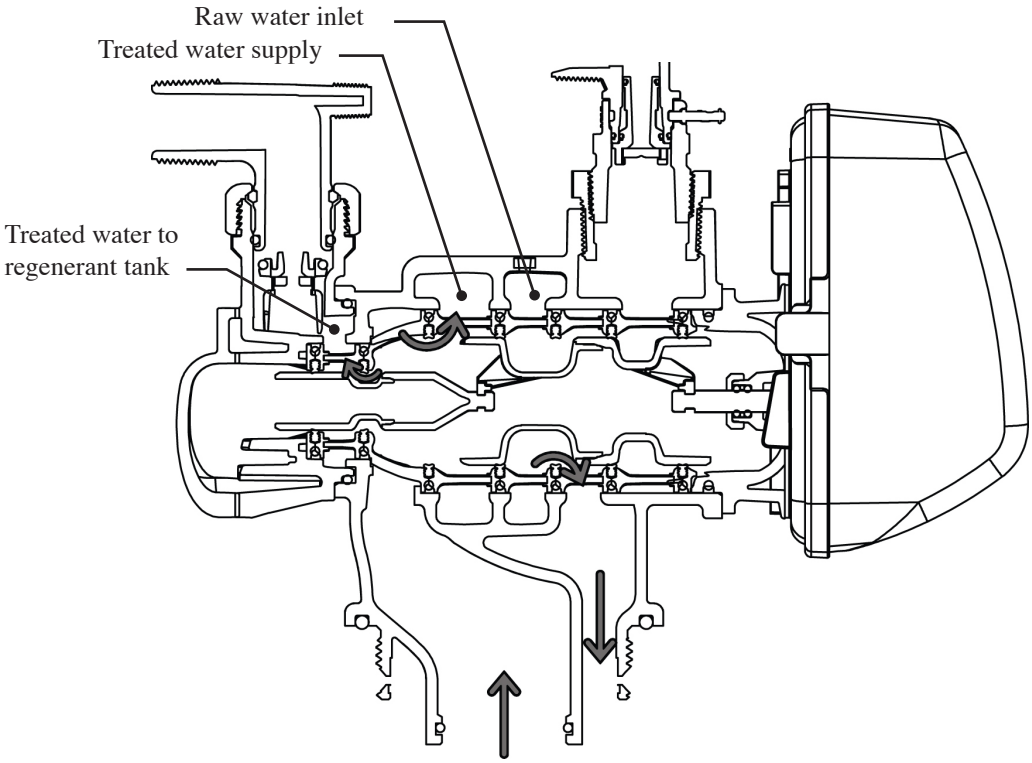

WS1.5 Drive Cap Assembly, Downflow Piston, Upflow Piston, Regenerant Piston, Spacer Stack Assembly and Main Body

Drawing No.	Order No.	Description	Quantity
1	V3004	WS1 DRIVE CAP ASSEMBLY	1
2	V3135	O-RING 228	1
3	V3407	WS1.25/1.5 PISTON DOWNFLOW ASSEMBLY (AMBER IN COLOR)	1
	V4042	WS1.25/1.5 PISTON UPFLOW ASSEMBLY (BLACK IN COLOR)	
4	V3174*	WS1 REGENERANT PISTON	1
5	V3423	WS1.5 BACKPLATE DOWEL	1
6	V3430-01	WS1.5 SPACER STACK ASSEMBLY	1
7	BACK PLATE	REFER TO PROGRAMMING AND COVER DRAWING MANUAL	1
8	V3419	O-RING 347	1
9	V3641	O-RING 225 FOR VALVE BODIES WITH NPT THREADS	1
	V3441	O-RING 226 FOR VALVE BODIES WITH BSPT THREADS	1
10	V3950-01	WS 1.5 NPT VALVE BODY, W/V3468	1
	V3950BSPT-01**	WS 1.5 BSPT VALVE BODY, W/V3465	1
NOT SHOWN	V3468	TEST PORT PLUG, 1/4" NPT	2
	V3465	TEST PORT PLUG, 1/4" BSPT	2
11	D1300	TOP BAFFLE DIFFUSER, 1.5/50MM	1

*V3174 regenerant piston not used for backwash only valves. V3010-15Z injector plug and V3195-01 refill port plug assembly must be used for backwash only valves.

**BSPT threads on inlet and outlet ports on the V3950BSPT-01, NPT threads on drain port

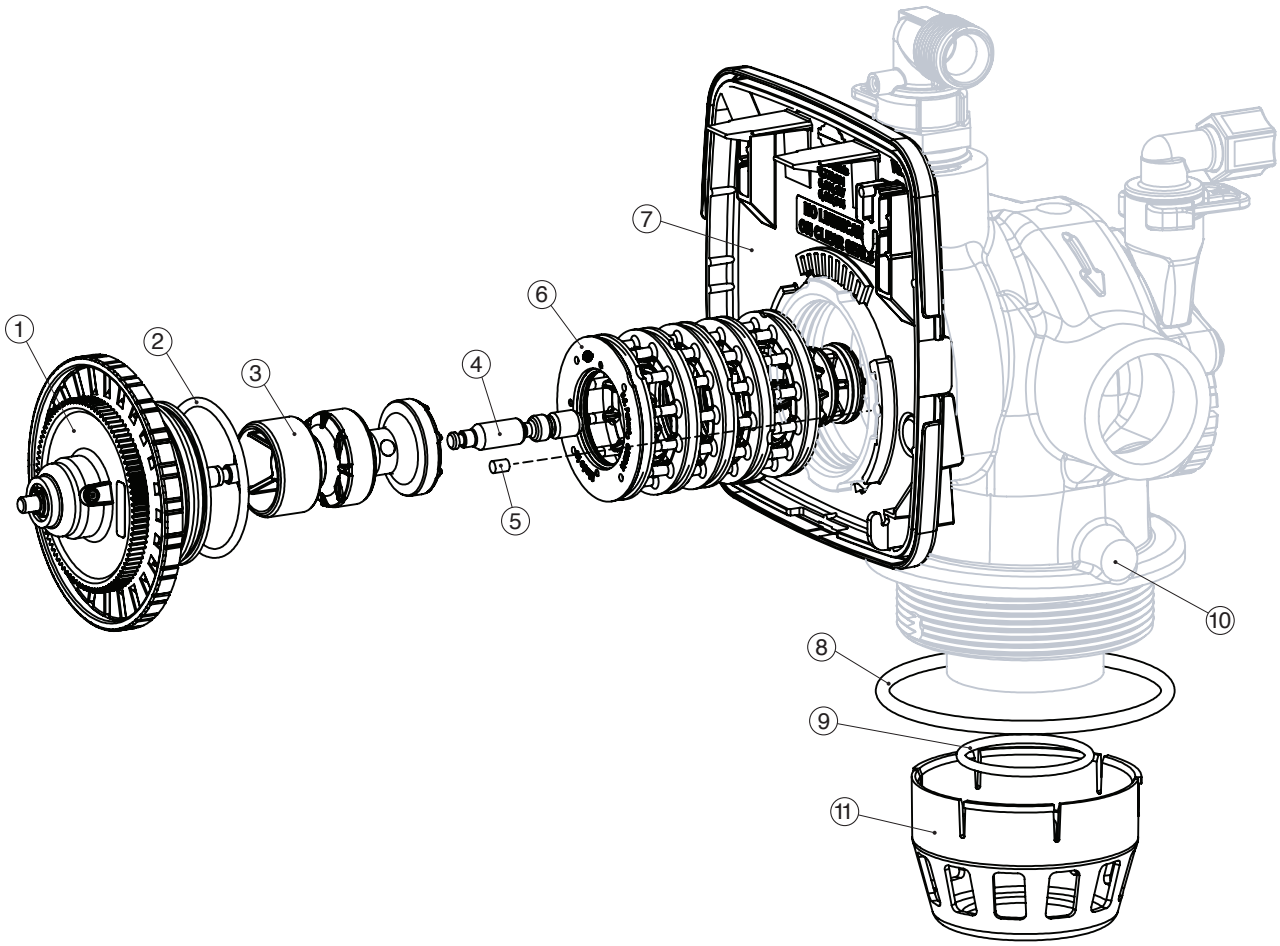

WS2 Drive Cap Assembly, Downflow or Upflow Piston, Regenerant Piston, Downflow or Upflow Spacer Stack Assembly and Main Body

Drawing No.	Order No.	Description	Quantity
1	V3726*	WS2 BRINE PISTON ASSEMBLY	1
2	V3725	WS2 PISTON DOWNFLOW ASSEMBLY (AMBER IN COLOR)	1
	V4059	WS2 PISTON UPFLOW ASSEMBLY (BLACK IN COLOR)	
3	V3452	O-RING 230	1
4	V3728	WS2 DRIVE CAP ASSEMBLY	1
5	V3724	WASHER FLAT SS 1/4	4
6	V3642	BOLT BHCS S/S 1/4-20X1.25	4
7	BACK PLATE	REFER TO PROGRAMMING AND COVER DRAWING MANUAL	1
8	V3729	WS2 STACK DOWNFLOW ASSEMBLY (BLACK IN COLOR)	1
	V3729-01	WS2 STACK UPFLOW ASSEMBLY (BLACK AND GREY IN COLOR)	
9	V3419	O-RING 347	1
10	V3641	O-RING 225 FOR VALVE BODIES WITH NPT THREADS	1
	V3441	O-RING 226 FOR VALVE BODIES WITH BSPT THREADS	
11	V3700-01	WS2 BODY NPT	1
	V3700BSPT-01**	WS2 BODY BSPT	
12	V3468	WS2H PLUG 1/4 HEX NPT	2
	V3465	WS2H PLUG 1/4 HEX BSPT	
13	D1300	TOP BAFFLE DFSR CLACK 1.5/50MM	1

* V3726 WS2 Brine Piston must also be used for Backwash Only valves.
** BSPT threads on inlet and outlet ports on the V3700BSPT-01, NPT threads on the drain port.

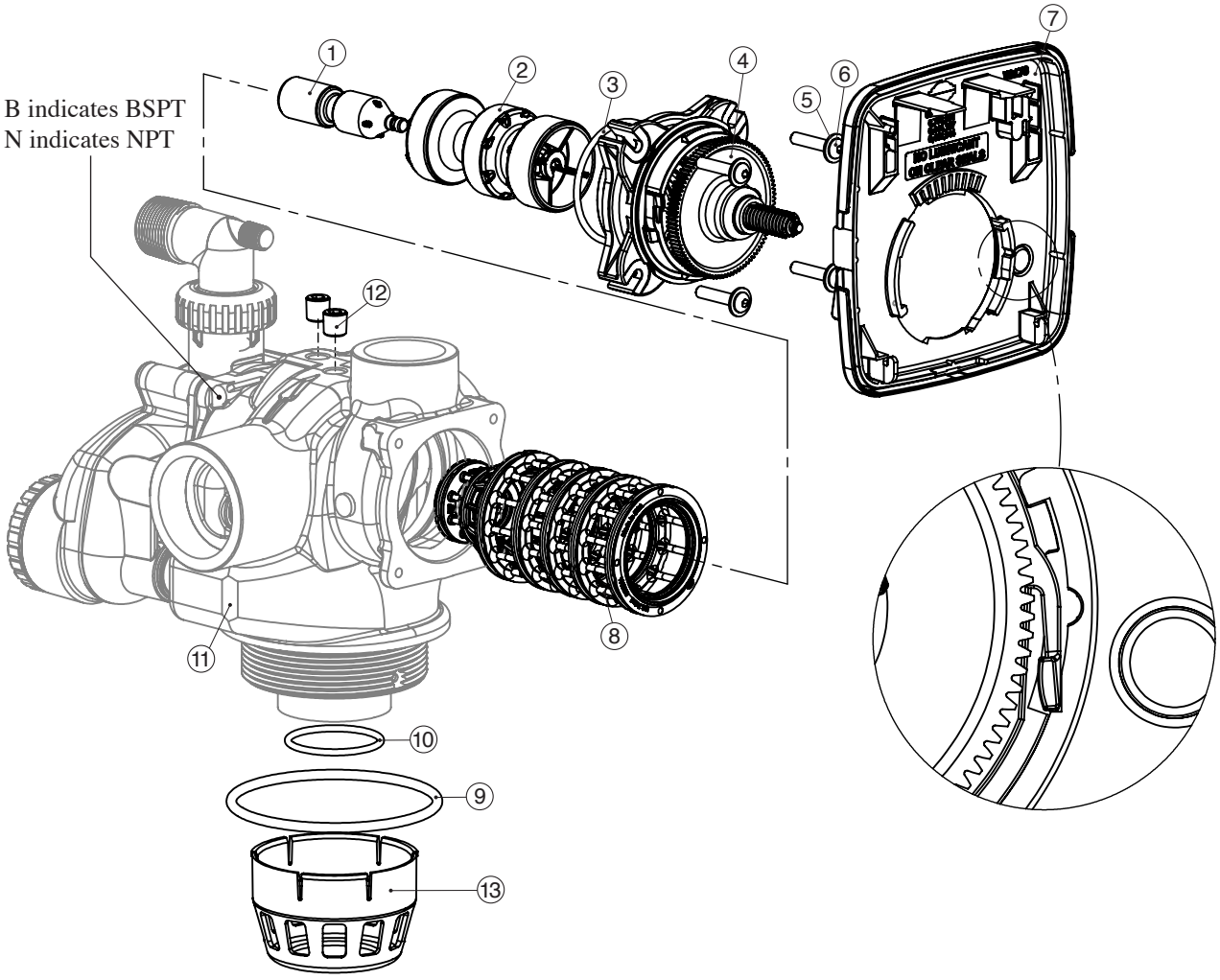

WS2 Quick Connect Drive Cap Assembly, Downflow or Upflow Piston, Regenerant Piston, Downflow or Upflow Spacer Stack Assembly and Main Body

Drawing No.	Order No.	Description	Quantity
1	V3726**	WS2 BRINE PISTON ASSEMBLY	1
2	V3725	WS2 PISTON DOWNFLOW ASSEMBLY (AMBER IN COLOR)	1
	V4059	WS2 PISTON UPFLOW ASSEMBLY (BLACK IN COLOR)	
3	V3452	O-RING 230	1
4	V3728	WS2 DRIVE CAP ASSEMBLY	1
5	V3724	WASHER FLAT SS 1/4	4
6	V3642	BOLT BHCS S/S 1/4-20X1.25	4
7	BACK PLATE	REFER TO PROGRAMMING AND COVER DRAWING MANUAL	1
8	V3729	WS2 STACK DOWNFLOW ASSEMBLY (BLACK IN COLOR)	1
	V3729-01	WS2 STACK UPFLOW ASSEMBLY (BLACK AND GREY IN COLOR)	
9	V3279	O-RING 346	1
10	V3280	O-RING 332 FOR VALVE BODIES WITH NPT THREADS	1
	V3452	O-RING 230 FOR VALVE BODIES WITH BSPT THREADS	
11	V3737-01	WS2 BODY QC NPT	1
	V3737BSPT-01***	WS2 BODY QC BSPT	
12	V3054*	WS2H 4IN BASE CLAMP ASSEMBLY	1
13	V3276	WS2H BOLT HEX 5/16 - 18 X 1-3/4	1
14	V3269	WS2H NUT 5/16 - 18 SS HEX	1
15	V3468	WS2H PLUG 1/4 HEX NPT	2
	V3465	WS2H PLUG 1/4 HEX BSPT	
NOT SHOWN	D1300-01	TOP BAFFLE DFSR CLACK 2/63MM	1

* V3054 WS2H 4IN BASE CLAMP ASY includes a V3276 WS2H BOLT HEX 5/16 - 18 X 1-3/4 and V3269 WS2H NUT 5/16 - 18 SS HEX
** V3726 WS2 Brine Piston must also be used for Backwash Only valves.
*** BSPT threads on inlet and outlet ports on the V3737BSPT-01, NPT threads on the drain port.

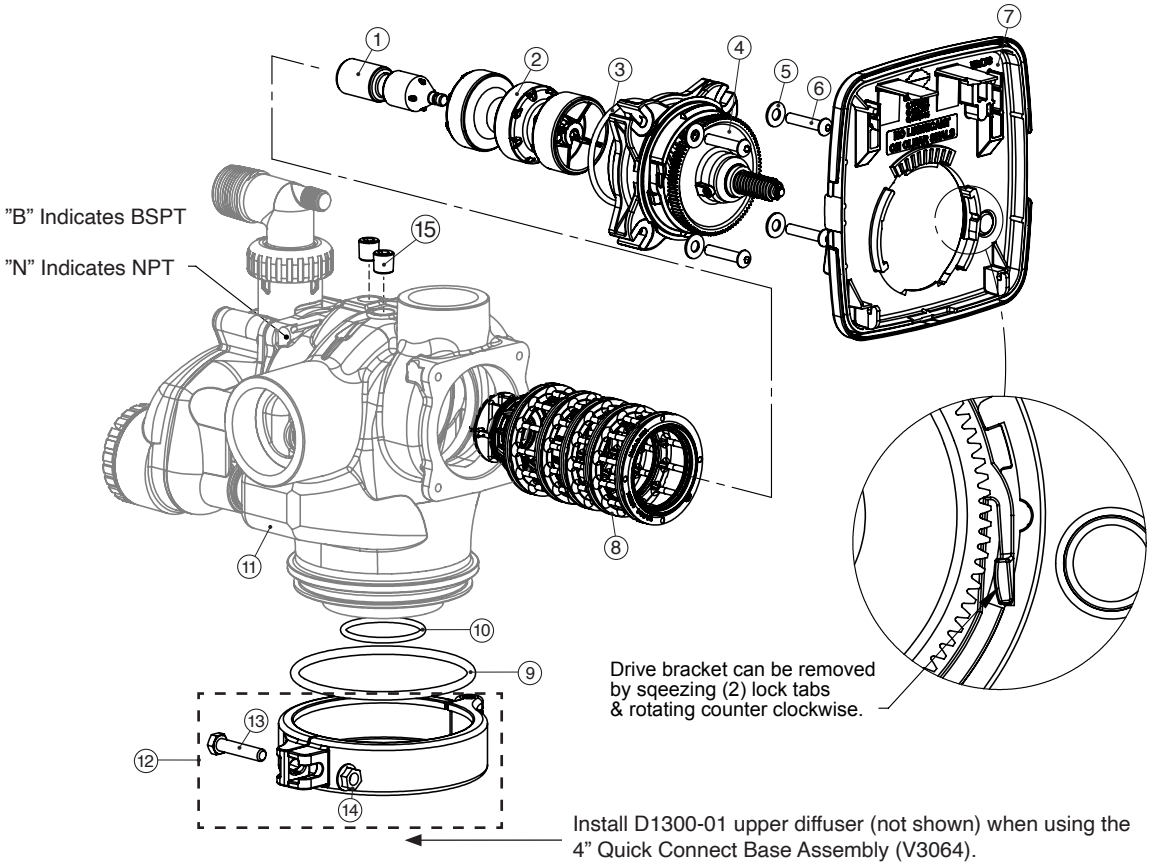

V3064 WS2H/2QC 4 INCH BASE ASY

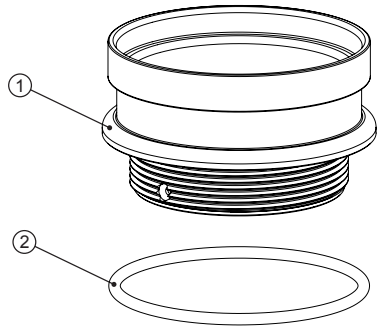

Drawing No.	Order No.	Description	Quantity
1	V3202-01	WS2H BASE	1
2	V3419	O-RING 347	1

V3055 WS2H/2QC FLANGE BASE ASY

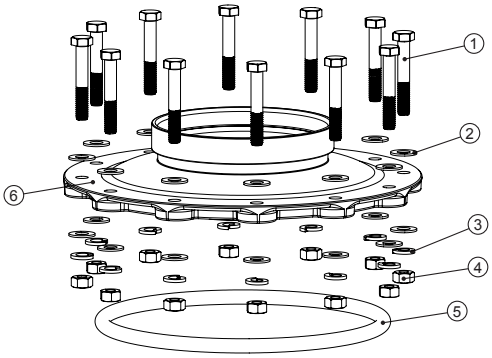

Drawing No.	Order No.	Description	Quantity
1	V3444	WS2H SCREW HEXCAP 5/16-18X2 SS	12
2	V3293	WS2H WASHER SS 5/16 FLAT	24
3	V3445	WS2H WASHER SPLIT LOCK 5/16 SS	12
4	V3447	WS2H NUT HEX 5/16-8 FULL SS	12
5	COR60FL	O RING 6 FLANGE ADAPTER	1
6	V3261-01	WS2H FLANGE BASE	1

V3260-02 WS2H/2QC SIDE MOUNT BASE NPT

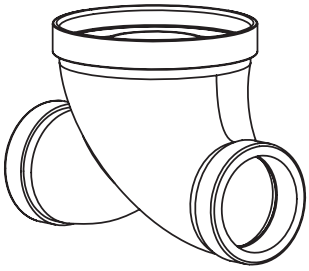

V3260BSPT-02 WS2H/2QC SIDE MOUNT BASE BSPT ASY

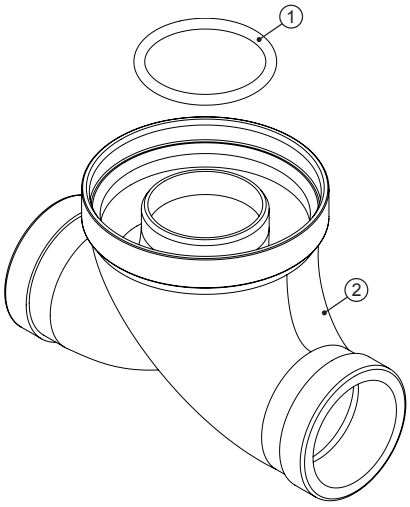

Drawing No.	Order No.	Description	Quantity
1	V3280	O-RING 332	1
2	V3260BSPT-01	WS2H SIDE MOUNT BASE BSPT	1

When using a side mount base with 2H or 2QC BSPT valves replace distributor pilot o-ring V3452 O-RING 230 with V3280 O-RING 332. See exploded view of 2H or 2QC valve for specific location of distributor pilot o-ring.

WS1.5 Regenerant Components

Drawing No.	Order No.	Description	Quantity
1	V3967	WS1.5 INJECTOR BODY, WELDED ASSEMBLY	1
2	V3441	O-RING -226	1
3***	V3968	WS1.5 INJECTOR FEED TUBE DOWNFLOW (BLACK IN COLOR)	1
	V3968-01	WS1.5 INJECTOR FEED TUBE UPFLOW (GREY IN COLOR)	
4	V3177-01	WS1 INJECTOR SCREEN	1
5****	V3969	WS1.5 INJECTOR DRAW TUBE DOWNFLOW (BLACK IN COLOR)	1
	V3969-01	WS1.5 INJECTOR DRAW TUBE UPFLOW (GREY IN COLOR)	1
6	V4349	WS15P INJECTOR CAP	1
7	V3152	O-RING -135	1
8	SEE PAGE 33	WS 1.5 INJECTOR	1
9	V3498**	REFILL FLOW CONTROL, 1/2”	1
10	V3428**	WS 1.5 REFILL RETAINER ASSEMBLY (0.5 GPM)	1
11	V3163	O-RING, -019	1
12	H4612	REGENERANT ELBOW W/FLOW CONTROL	1
13	JCPG-8PBLK	NUT, COMPRESSION, 1/2” BLACK	1
14	JCP-P-8	INSERT, POLYTUBE 1/2”	1
15	V3182	REFILL FLOW CONTROL (0.5 GPM)	1
16	H4615	RETAINING CLIP	1
17	V3724	WASHER, FLAT STAINLESS STEEL	4
18	V3642	BOLT, BHCS STAINLESS STEEL 1/4-20X 1 1/4	4
19	V3195-01	REFILL PORT PLUG ASY	1

**Contains a V3182 0.5 gpm flow control
***V3968 and V3968-01 each contain one D1245 O-RING 111 and two V3155 O-RING 112
****V3969 and V3969-01 each contain one V3638 O-RING 113 and two V3157 O-RING 115

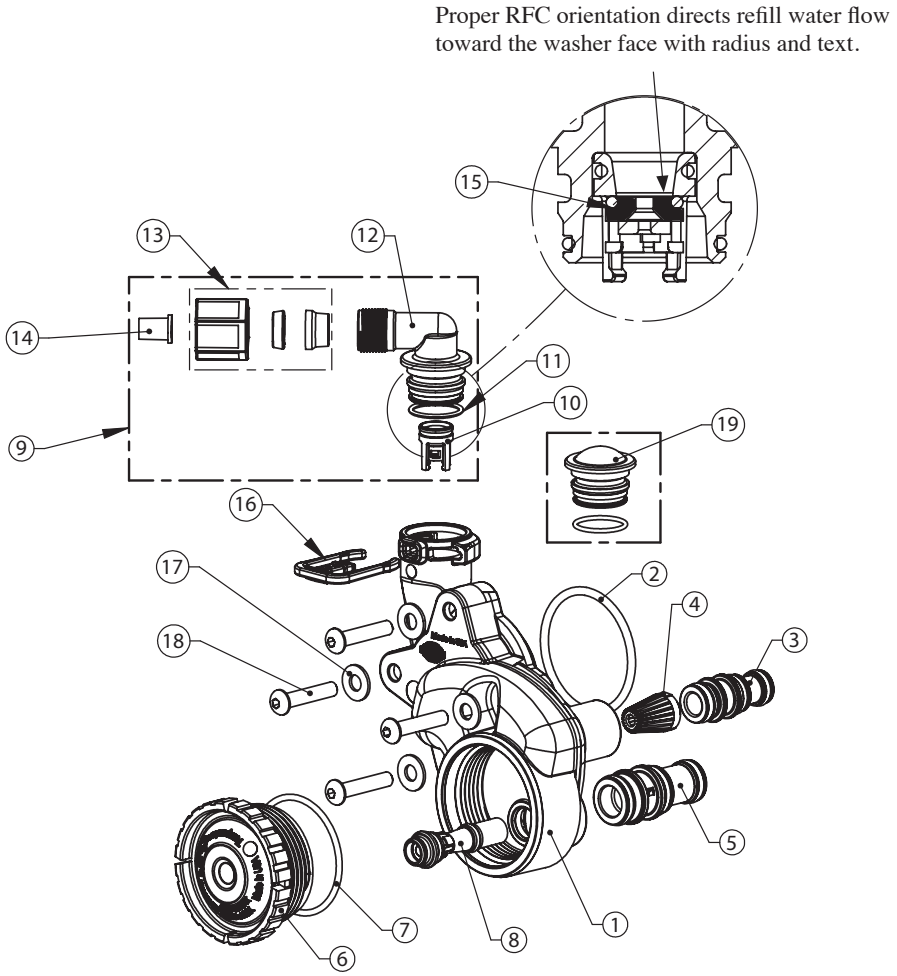

WS2 Injector Valve Body, Refill Flow Control and Injector

Drawing No.	Order No.	Description	Quantity
1	V3477	WS2H INJECTOR CAP	1
2	V3152	O-RING 135	1
3	V3727	WS2 INJECTOR BODY ASSEMBLY	1
4	See page 33	WS2/2H INJECTOR ASSY	1
5	V3731	WS2 INJ DRAW TUBE DOWNFLOW ASSEMBLY (BLACK IN COLOR)	1
	V3731-01	WS2 INJ DRAW TUBE UPFLOW ASSEMBLY (GREY IN COLOR)	
6	V3730	WS2 INJ FEED TUBE DOWNFLOW ASSEMBLY (BLACK IN COLOR)	1
	V3730-01	WS2 INJ FEED TUBE UPFLOW ASSEMBLY (GREY IN COLOR)	
7	V3315	O-RING 231	1
8	V3724	WASHER FLAT SS 1/4	4
9	V3643	BOLT BHCS S/S 1/4-20x2.25	4
10	V3162-022*	WS1 DLFC 022 FOR 3/4	1
11	V3231	WS2H REFILL FLOWCNTRL RETAINER	1
12	V3277	O-RING 211	1
13	V3105	O-RING 215	1
14	V3150	WSI SPLIT RING	1
15	V3151	WS1 NUT 1 QC	1
16	V3149	WS1 FTG 1 MALE NPT ELBOW	1
Not Shown	V3189	WS1 FTG 3/4&1 PVC SLVNT 90	Optional
Not Shown	H4915**	FTG KIT 494 BV 1/2 POLYTUBE	Optional
Not Shown	V3499	WS2H FITTING CAP 1 IN THREADED	Optional
Not Shown	V3797***	WS1 FTG 1 MALE BSPT ELBOW	BSPT Only

*Any V3162-XXX flow control may be used. WS2 valves are shipped with a V3162-022 (2.2 gpm) flow control. Flow control sizes range from 0.7 up to 10 gpm. WS2 valves can only be set for minutes of fill because various sizes of flow controls can be used. To calculate for pounds or kilograms of salt, take minutes of fill times the flow rate of the flow control being used to arrive at the number of gallons of water be added to the brine tank. Each gallon of water will dissolve approximately 3 pounds of salt.

**Use of H4915 may severely reduce brine draw rates.

*** BSPT Valves also include a V3797 WS1 FTG 1 MALE BSPT ELBOW

A V3731 and V3731-01 each contain one D1262 O-RING 118 and two V3639 O-RING 119.

A V3730 and V3730-01 each contain three V3638 O-RING 113.

Backwash Only Valves include a V3499 but do not include the following parts: V3189, H4915, V3162-022, V3231 and V3277.

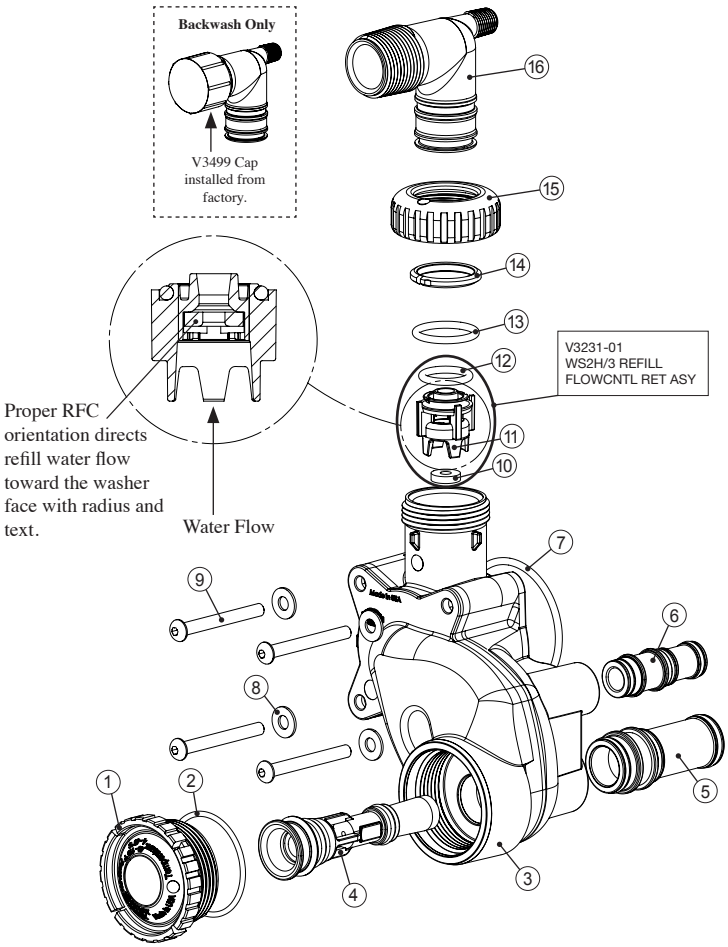

WS 1.5” Injectors

Drawing No.	Order No.	Description	Nozzle Color	Downflow Typical Tank Diameter[1]	Quantity
1	V3010-15B	WS1.5 Injector Asy B	Violet	12”	1
	V3010-15C	WS1.5 Injector Asy C	Red	13”	
	V3010-15D	WS1.5 Injector Asy D	White	14”	
	V3010-15E	WS1.5 Injector Asy E	Blue	16”	
	V3010-15F	WS1.5 Injector Asy F	Yellow	18”	
	V3010-15G	WS1.5 Injector Asy G	Green	21”	
	V3010-15H	WS1.5 Injector Asy H	Orange	24”	
2	V3010-15Z	WS1.5 Injector Plug		NA	

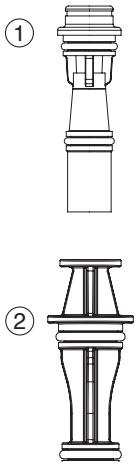

V301015B through V3010-15H injectors include one V3416 o-ring 012 (lower) and one V3171 o-ring 013 (upper).

For upflow brine application downsize your injector by two tank sizes minimum and refer to the injector graphs for verifying proper selection.

WS 2” and 2” QC Injectors

Drawing No.	Order No.	Description	Identifier	Downflow Typical Tank Diameter[1]	Quantity
Not Shown	V3010-2R-15B **	WS2 / 2H Injector Assembly R, W/V3010-15B	Violet	12”	1
	V3010-2S-15C **	WS2 / 2H Injector Assembly S, W/V3010-15C	Red	13”	
	V3010-2T-15D **	WS2 / 2H Injector Assembly T, W/V3010-15D	White	14”	
	V3010-2U-15E **	WS2 / 2H Injector Assembly U, W/V3010-15E	Blue	16”	
3	V3010-2A	WS2 / 2H Injector Assembly A	Stamped A	18”	
	V3010-2B	WS2 / 2H Injector Assembly B	Stamped B	21”	
	V3010-2C	WS2 / 2H Injector Assembly C	Stamped C	24”	
	V3010-2D	WS2 / 2H Injector Assembly D	Stamped D	30”	
	V3010-2E	WS2 / 2H Injector Assembly E	Stamped E	36”	
	V3010-2F	WS2 / 2H Injector Assembly F	Stamped F	42”	
	V3010-2G	WS2 / 2H Injector Assembly G	Stamped G	48”	

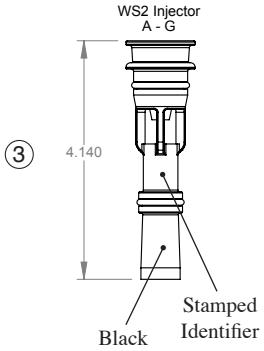

** V3010-2X-15X Injectors contain a V3010-2-15 WS2 injector adapter with a WS1.5 injector inside

V3010-2X injectors and the V3010-2-15 Adapter include a V3283 O-RING 117 and a V3284 O-RING 114. The V3010-2-15 Adapter allows the 2" valve to be used on smaller tank sizes. The V3010-2-15 adapter can be used with any V3010-15X injector. The V3010-15X injector includes one V3416 O-RING 012 (lower) and one V3171 O-RING 013 (upper).

1. Actual injector size may vary depending on the design and application of the system. The injectors are sized for a typical downflow softener using standard mesh synthetic cation exchange media regenerating with sodium chloride. See the injector graphs on the following pages to meet specific applications. Variances in drain and draw line restrictions will effect injector performance.

For upflow brine application downsize your injector by two tank sizes minimum and refer to the injector graphs for verifying proper selection.

VIOLET, ORDER NO. V3010-15B
or V3010-2R-15B
Metric Units

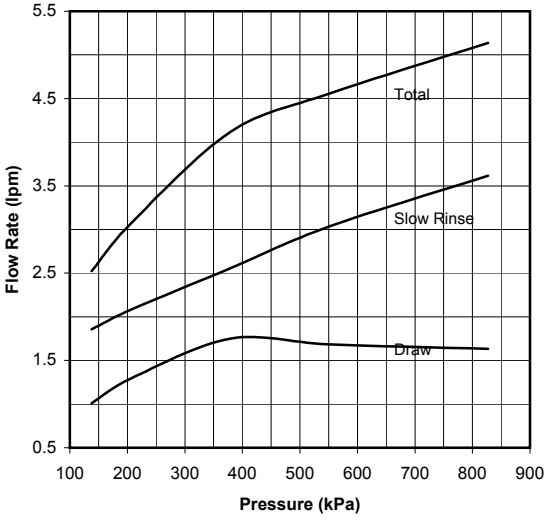

VIOLET, ORDER NO. V3010-15B
or V3010-2R-15B
US Units

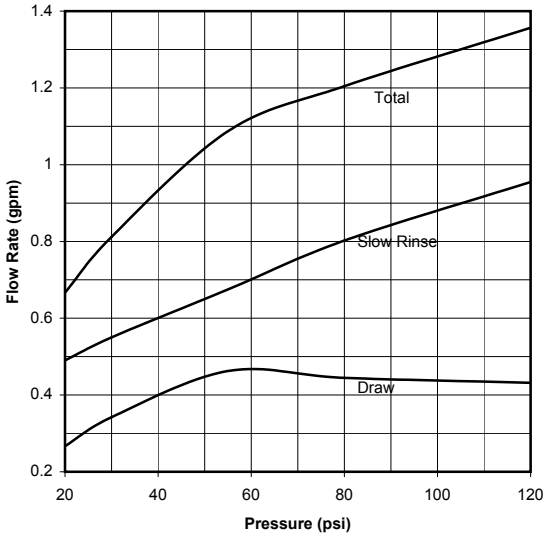

RED, ORDER NO. V3010-15C
or V3010-2S-15C
Metric Units

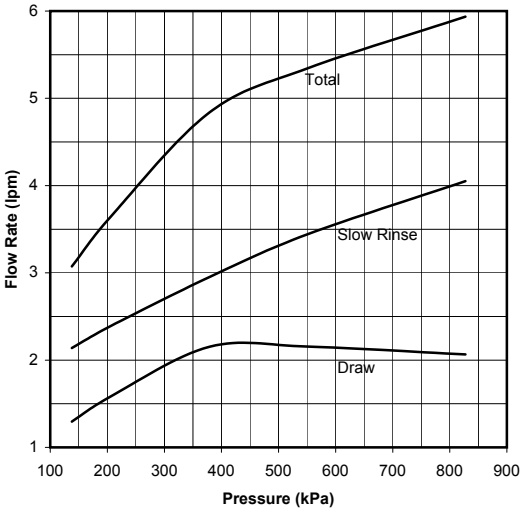

RED, ORDER NO. V3010-15C
or V3010-2S-15C
US Units

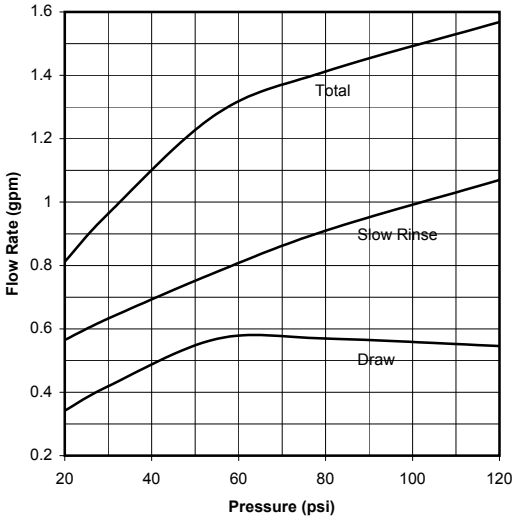

WHITE, ORDER NO. V3010-15D
or V3010-2T-15D
Metric Units

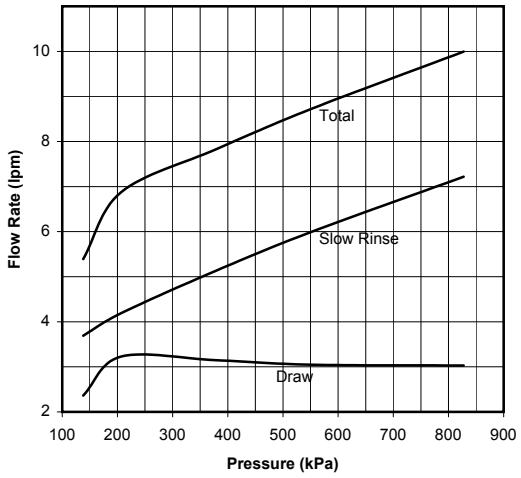

WHITE, ORDER NO. V3010-15D
or V3010-2T-15D
US Units

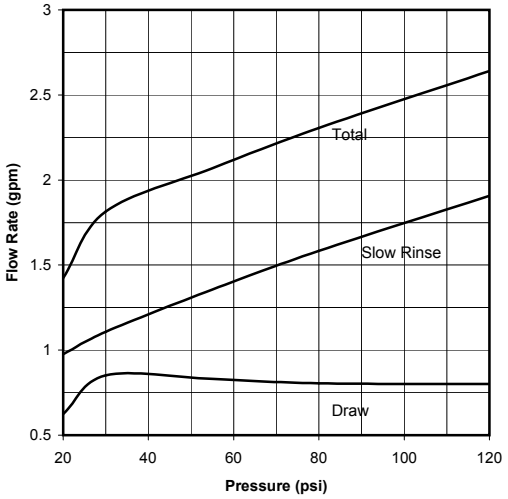

BLUE, ORDER NO. V3010-15E
or V3010-2U-15E
Metric Units

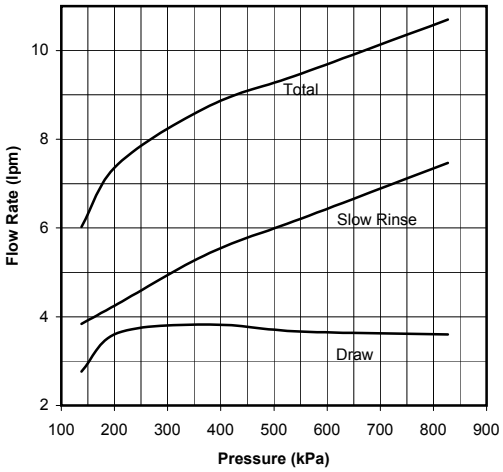

BLUE, ORDER NO. V3010-15E
or V3010-2U-15E
US Units

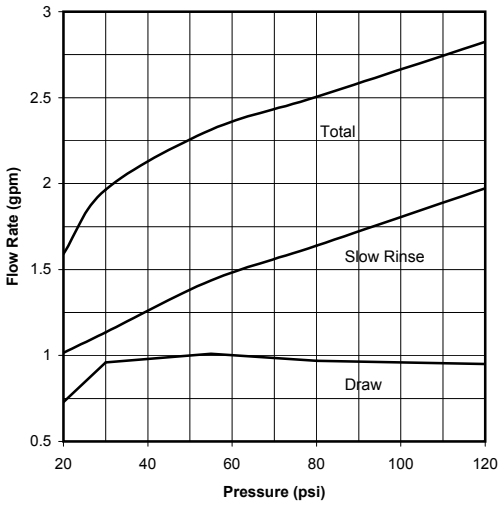

YELLOW, ORDER NO. V3010-15F
Metric Units

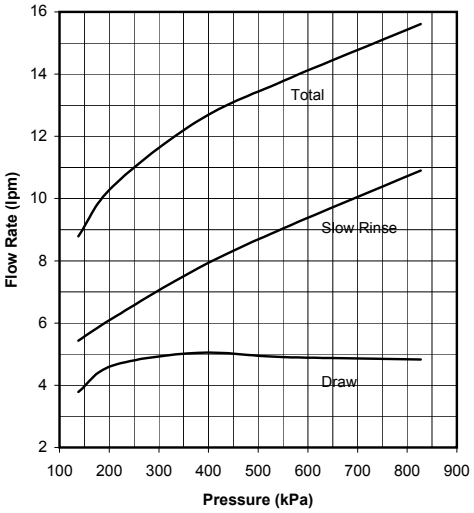

YELLOW, ORDER NO. V3010-15F
US Units

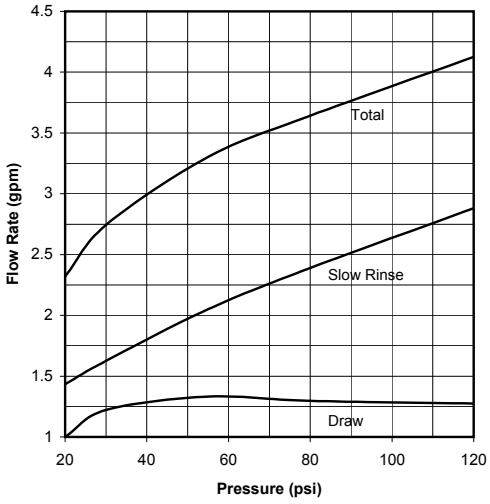

GREEN, ORDER NO. V3010-15G
Metric Units

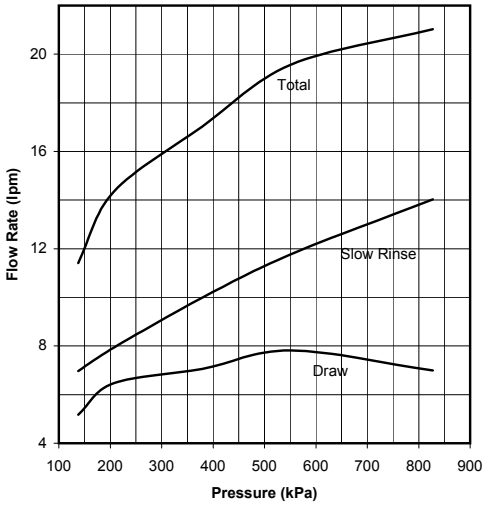

GREEN, ORDER NO. V3010-15G
US Units

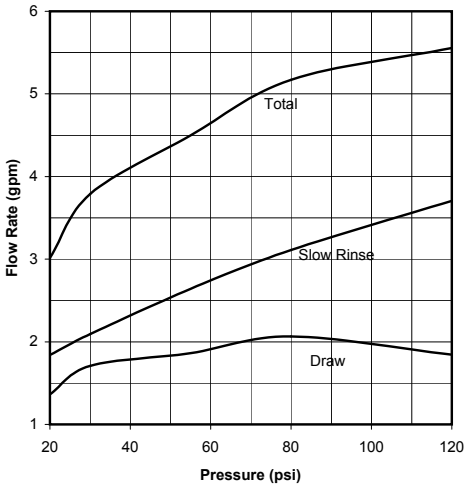

ORANGE, ORDER NO. V3010-15H
Metric Units

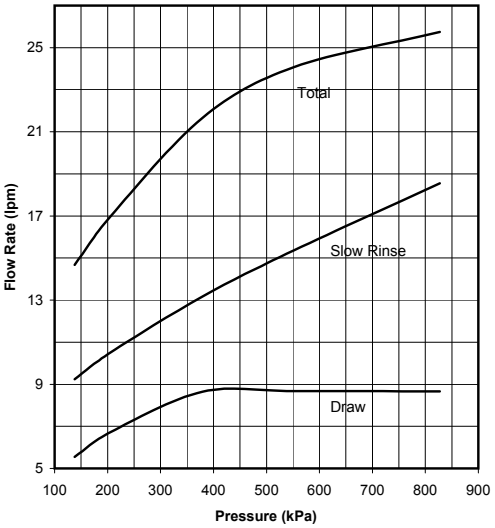

ORANGE, ORDER NO. V3010-15H
US Units

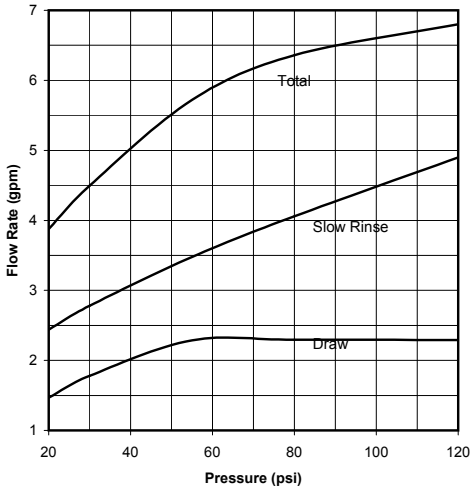

ORDER NO. V3010-15I
Metric Units

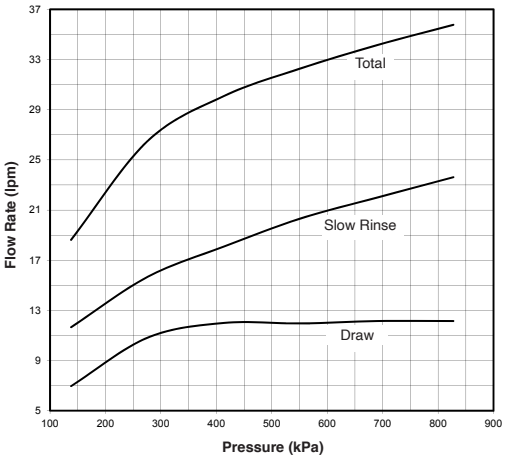

ORDER NO. V3010-15I
US Units

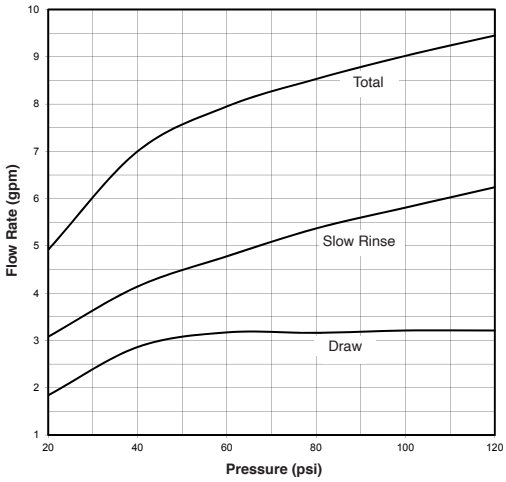

Order No. V3010-2A
US Units

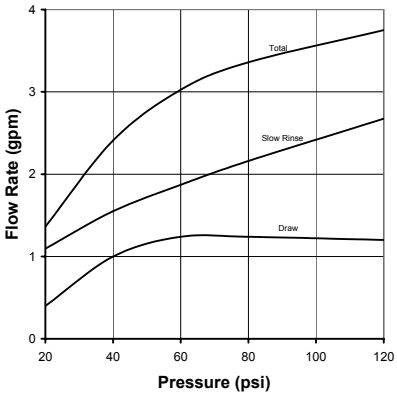

Order No. V3010-2B
US Units

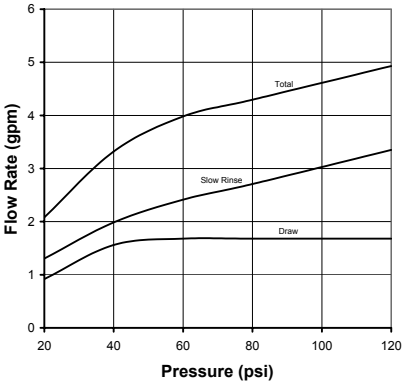

Order No. V3010-2C
US Units

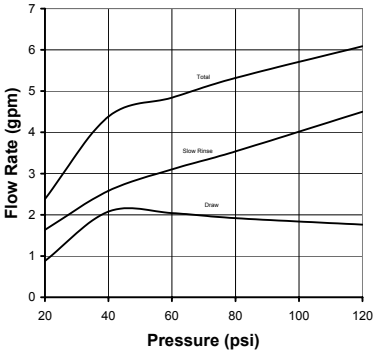

Order No. V3010-2D
US Units

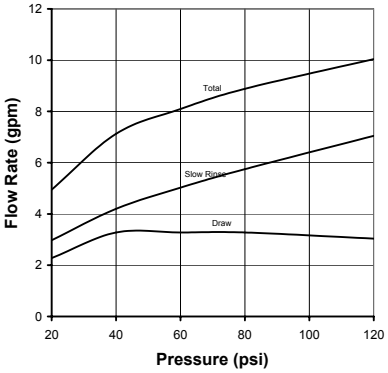

Order No. V3010-2E
US Units

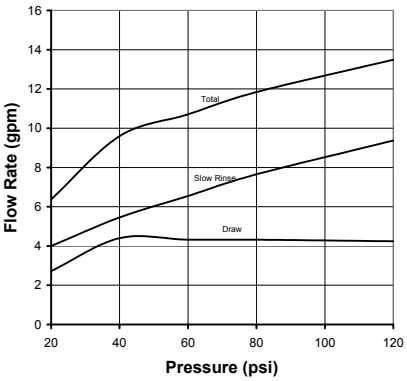

Order No. V3010-2F
US Units

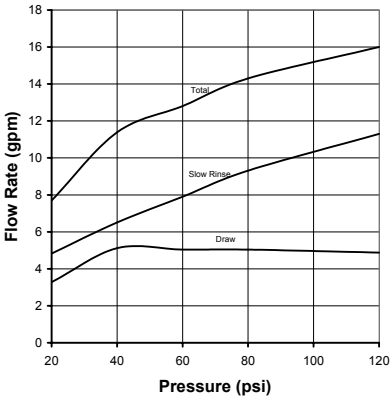

Order No. V3010-2G
US Units

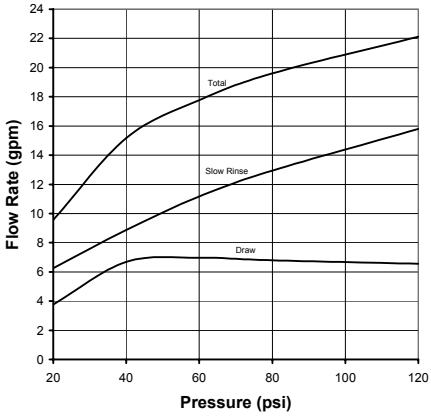

Order No. V3010-2A
Metric Units

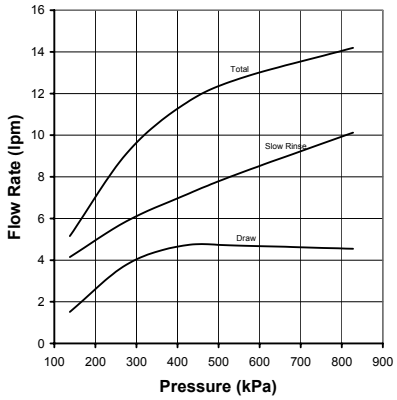

Order No. V3010-2B
Metric Units

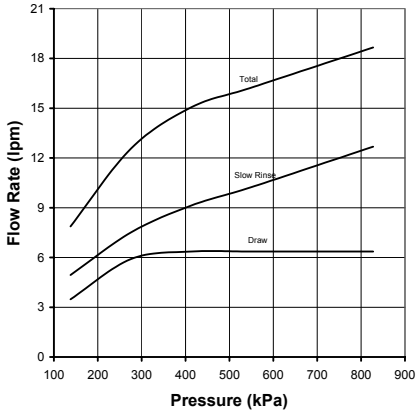

Order No. V3010-2C
Metric Units

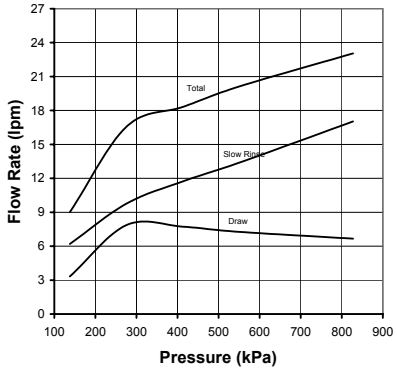

Order No. V3010-2D
Metric Units

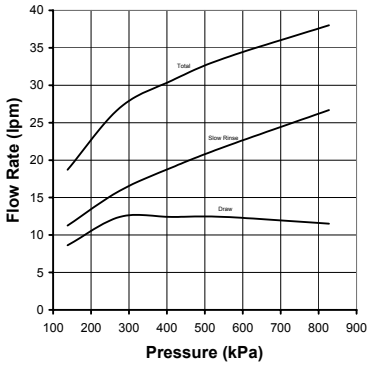

Order No. V3010-2E
Metric Units

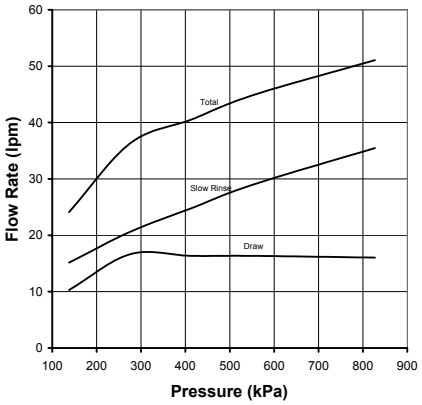

Order No. V3010-2F
Metric Units

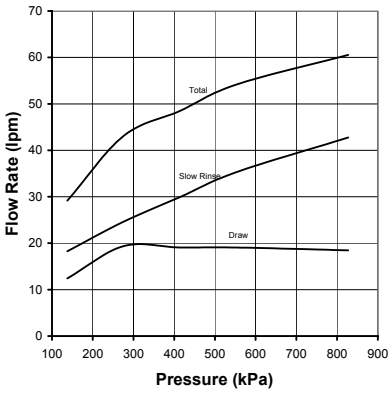

Order No. V3010-2G
Metric Units

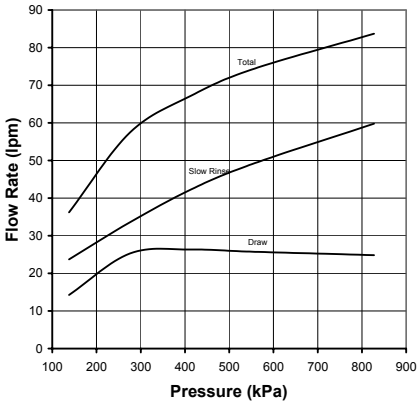

Drain Line Flow Controls

All drain line flow control housings are shipped without flow control washers.
See drain line flow control washer section for available flow selections.

Elbow, 0.7 - 10 GPM

Item	Part#	Description	Qty.
	V3158-04	WS Drain Fitting, 3/4" Elbow	
1	V3158-03	Drain Elbow, 3/4 NPT	1
2	V3159-01	DLFC Retainer Assembly	1
3	V3163	O-ring, -019	1
4	H4615	Locking Clip	1
5*	V3983	WS2 DLFC Adapter	1
6	V3162-xx	See DLFC Section	1

*Also available: V3414 WS1.5 DLFC Adapter

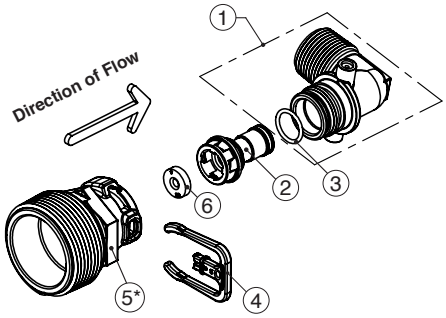

Inline Plastic, 9 - 25 GPM

Item	Part#	Description	Qty.
	V3008-05	WS Drain Fitting, 1" Straight	
1	V3167	WS Drain Fitting Adapter, 1" NPT	1
2	V3166-01	Drain Fitting Body	1
3	V3151	WS1 Nut, QC	1
4	V3150	WS1 Split Ring	1
5	V3105	O-ring -215	1
6	V3163	O-ring -019	1
7	H4615	Locking Clip	1
8**	V3983	WS2 DLFC Adapter	1
9	V3190-xx	See DLFC Section	1

**Also available: V3414 WS1.5 DLFC Adapter

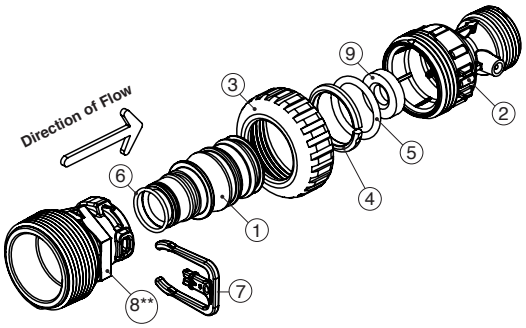

MxF Stainless Steel, 9 - 85 GPM

Drawing No.	Order No.	Description	Quantity			
			V3079	V3079BSPT	V3080	V3080BSPT
1	V3081	WS15 RETAINER DLFC ASY	1	1	1	1
2	V3645	WS15 DLFC FLANGE OUTLET FNPT	1		1	
	V3645BSPT	WS15 DLFC FLANGE OUTLET FBSPT		1		1
3	V3646	WS15 DLFC FLANGE INLET MNPT			1	1
4	V3388	WS125 DLFC FLANGE INLET MNPT	1	1		
5	V3652	BOLT HEXHD S/S HCS 5/16-18x3/4	4	4	4	4
6	V3441	O-RING 226	1	1	1	1
7	V3162-xx	See DLFC Section	0-6	0-6	0-6	0-6
8	V3190-xx	See DLFC Section	1	1	1	1

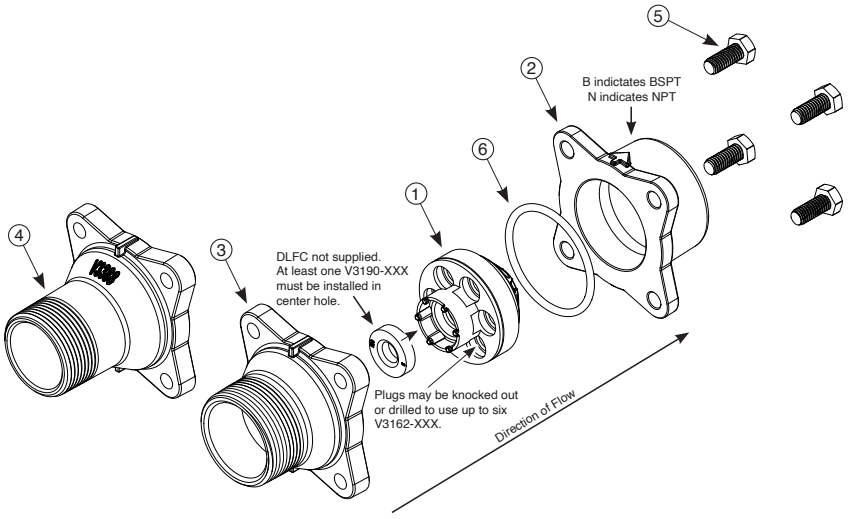

Drain Line Flow Control Washers

Order No.	Description
V3162-007	.7 GPMDrain line flow control
V3162-010	1.0 GPMDrain line flow control
V3162-013	1.3 GPMDrain line flow control
V3162-017	1.7 GPMDrain line flow control
V3162-022	2.2 GPMDrain line flow control
V3162-027	2.7 GPMDrain line flow control
V3162-032	3.2 GPMDrain line flow control
V3162-042	4.2 GPMDrain line flow control
V3162-053	5.3 GPMDrain line flow control
V3162-065	6.5 GPMDrain line flow control
V3162-075	7.5 GPMDrain line flow control
V3162-090	9.0 GPMDrain line flow control
V3162-100	10.0 GPMDrain line flow control
V3190-090	9.0 GPMDrain line flow control
V3190-100	10.0 GPMDrain line flow control
V3190-110	11.0 GPMDrain line flow control
V3190-130	13.0 GPMDrain line flow control
V3190-150	15.0 GPMDrain line flow control
V3190-170	17.0 GPMDrain line flow control
V3190-200	20.0 GPMDrain line flow control
V3190-250	25.0 GPMDrain line flow control

All DLFC housings ship without DLFC installed.
Select control from table for proper backwash, based on media manufacturer's recommendations.

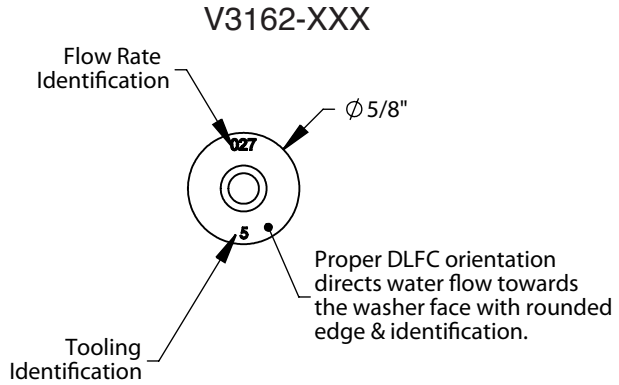

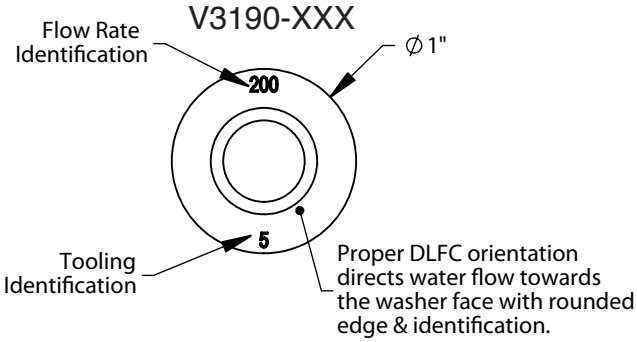

Meter Assembly for WS1.5 and WS2 Valves

Note: Be sure the proper meter size is programmed in the software.
Standard meter cable used for spacing up to 3” between valve body and meter body, longer distance requires longer cable #V3221.

Service or replace the turbine by:
1. Turn the bypass for the system on and relieve the pressure on the system before removing the meter.
2. Press downward on the remote meter assembly to relieve tension on the retaining clip V3632. Remove the clip and take the meter assembly out of the housing.
3. Remove the bend from the two exposed tips of the retaining clip V3501 and remove clip.
4. Service or replace the V3118-03 WS15/2 Turbine Assembly and place it back on the turbine shaft.
5. Insert the V3501 WS15/2 Turbine Clip and re-bend the exposed ends of the clip. The V3118-03 turbine has a groove to line up with the V3501 WS15/2 Turbine Clip.
6. Insert meter assembly back into the meter housing.
7. Re-install the meter retaining clip V3632 as shown below.
8. Open the bypass for the system slowly to bring back into service and check to be sure you have no water leaks.

The V3118-03 has a groove to line up with the V3501 WS1.5/2 Turbine Clip.

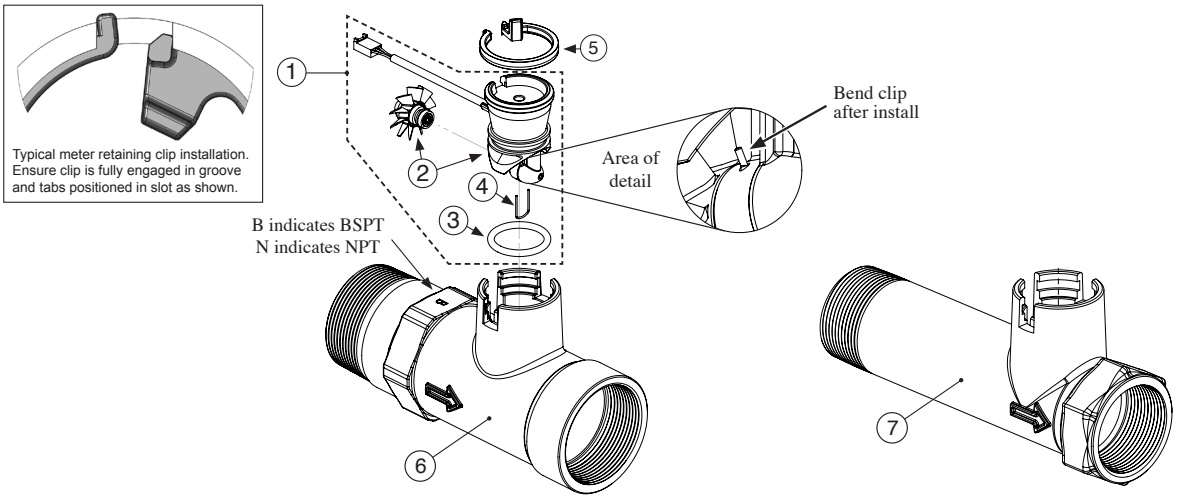

V3040	1.5” NPT Meter, 28” Cable
V3040BSPT	1.5” BSPT Meter, 28” Cable
V3040-15	1.5” NPT Meter, 15’ Cable
V3040BSPT-15	1.5” BSPT Meter, 15’ Cable

V3094	2” NPT Meter, 28” Cable
V3094BSPT	2” BSPT Meter, 28” Cable
V3094-15	2” NPT Meter, 15’ Cable
V3094BSPT-15	2” BSPT Meter, 15’ Cable

Drawing No.	Order No.	Description	Quantity
1	V3003-02	Commercial meter assembly, 28” Cable	1
	V3221	Commercial meter assembly, 15’ Cable	
2	V3118-03	Commercial meter turbine assembly	1
3	V3105	O-ring, -215	1
4	V3501	Turbine clip	1
5	V3632 *	Meter Retaining Clip	1
6	V3754-01	WS2 Meter Housing NPT	1
	V3754BSPT-01	WS2 Meter Housing BSPT	
7	V3401-04	WS1.5 Meter Housing NPT	1
	V3401BSPT-04	WS1.5 Meter Housing BSPT	
Not Shown	V3437	WS1.5 Flow Straightener	1
	V3488	WS2 Flow Straightener	

Installation of the WS2 Meter NPT Assembly can be accomplished with 2” NPT pipe. For WS2 Meter BSPT Assembly use 63mm pipe.

WHEN INSTALLING THE METER, MAKE SURE THE ARROW ON THE METER BODY IS GOING THE SAME DIRECTION AS THE WATER FLOW. THIS WATER METER SHOULD NOT BE USED AS THE PRIMARY MONITORING DEVICE FOR CRITICAL OR HEALTH EFFECT APPLICATIONS. OPERATING PRESSURES: 20 PSI MINIMUM / 125 PSI MAXIMUM • OPERATING TEMPERATURES: 40°F MINIMUM / 110°F MAXIMUM

*The meter can be installed in either horizontal or "upflow" vertical applications.

Motorized Alternating Valve Piston Style Applications

For V3071, V3071BSPT, V3076 or V3076BSPT

OPERATING PRESSURES: 20 PSI MINIMUM / 125 PSI MAXIMUM
OPERATING TEMPERATURES: 40°F MINIMUM / 110°F MAXIMUM

Service or Installation of Motor: Do not lubricate the motor or the gears. To install the motor, move the spring clip loop to the right and hold. Gently turn the motor while inserting so that the gear on the motor meshes with the gears under the drive gear cover. If the motor will not easily engage with the drive gears when reinstalling, lift and slightly rotate the motor before reinserting. Release the spring clip loop and continue to rotate the motor until the wires are horizontal and the motor housing engages the small plastic bulge inside the drive bracket motor retainer. Reconnect the motor plug to the two-pronged jack on the board labeled drive.

If the control valve manual does not include instructions for setting up the software for No Hard Water Bypasses (NHWB), Separate Source (SEPS), or Twin Tank Operation (ALT A and ALT b), please contact your local equipment supplier for current copies of installation instructions.

Up to 2 additional cables can be brought through the back plate. Locate the round strain relief knock-out on the inside of the back plate. Use a punch and hammer to remove the knock-out. One or both tabs at the bottom of the strain relief feature may be broken out with a needle-nose pliers. The additional cables may be brought through the knock-out hole, and connected to the PC board. After the cables are connected to the PC board, weave the cables through the strain relief feature, and then use V3805 Strain Relief Cover Kit to cover the cables in the strain relief. To help prevent damage to the cables, allow nearby solder joints to cool, or solvent cement joints to cure.

- For twin tank operation, the 8' interconnect cable must be threaded through the back plates and connected to the three pin connector labeled COMM CABLE on both the ALT A and ALT b control valves. The 8' interconnect cable is not used for No Hard Water Bypass (NHWB) or Separate Source (SEPS) operation. NOTE: It is possible to use the Motorized Alternating Valve on controls with individual meters with some International or Custom PC Boards. When using the Motorized Alternating Valve with two meters, it is necessary to disconnect or cut the left wire on the interconnect cable. This is the wire closest to the center cut out on the PC Board.
- The 8' alternator valve motor cable must be threaded through the back plate and connected to the two pin connector labeled MAV on the control valve board (for twin tank operation connect to the unit set as ALT A).
- The 15' water meter cable must be threaded through the back plate and connected to the three pin connection labeled METER on the control valve board. NOTE: A meter must be used for twin tank operation, meters are recommended but not required for NHWB or SEPS operation. If using the Motorized Alternating Valve with a meter on each control, it is necessary to connect each meter to the PC Board.
- The 15' AC Adapter or power cable must be thread through the back plate of all control valves. The AC adapter should be installed to a properly grounded (not switched) outlet.

No Hard Water Bypass:
The MAV will be driven closed before the first regeneration cycle that is not FILL or SOFTENING or FILTERING, and be driven open after the last regeneration cycle that is not FILL. If the control valve enters into an error state during regeneration mode, the MAV will remain in its current state until the error is corrected and reset.

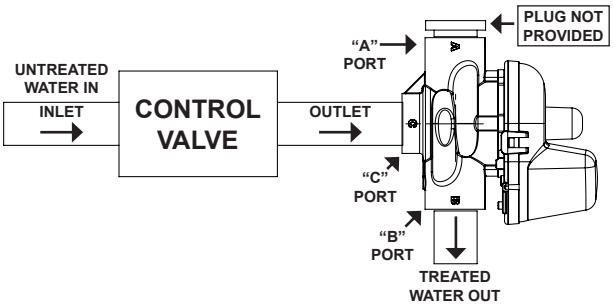

Caution:
No Hard Water Bypass installation prevents water from entering the downstream plumbing. If a downstream plumbing device or local code requires an uninterrupted water supply, design the installations to accommodate.

Separate Source Regeneration:
The MAV will be driven closed (i.e. let water flow from A port to C port) before the first regeneration cycle, and be driven open (i.e. let water flow from B port to C port) after the last regeneration cycle. If the control valve enters into an error during regeneration mode, the MAV will remain in its current state until the error is corrected and reset.

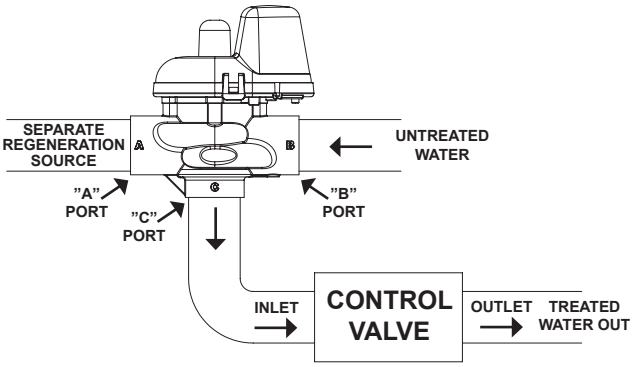

Note:
If there is a treated water demand during regeneration, separate source water will be used.

Twin Tank Alternator:
If the control valve manual does not include instructions for setting up ALTA and ALTb software, please contact your local equipment supplier for current copies of installation instructions. If the control valve is in an error state during regeneration mode, the MAV will close the B port and keep open the A port until the error is corrected and reset.

REGENERATION WITH HARD WATER

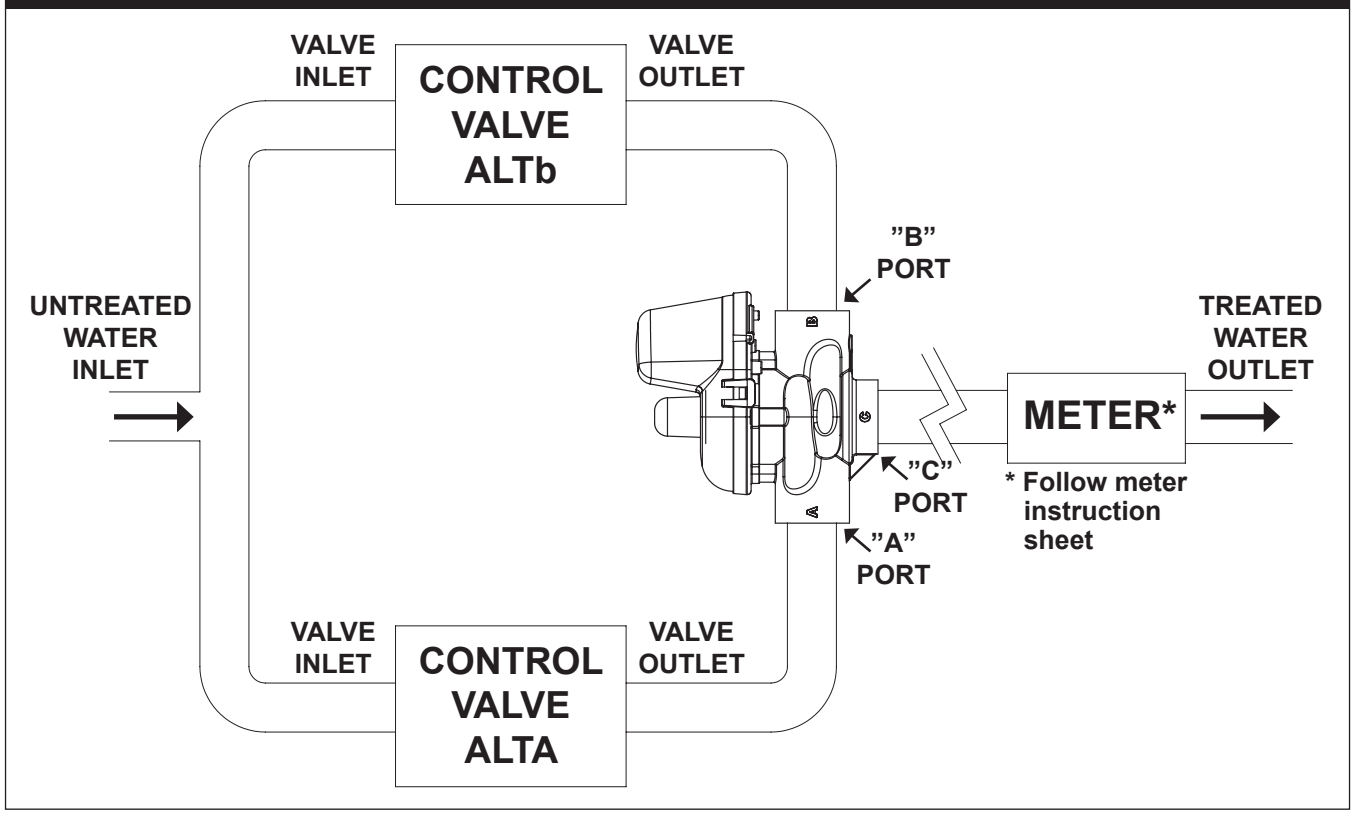

REGENERATION WITH SOFT WATER

Note: WS2 valve cannot be used in this type of installation.

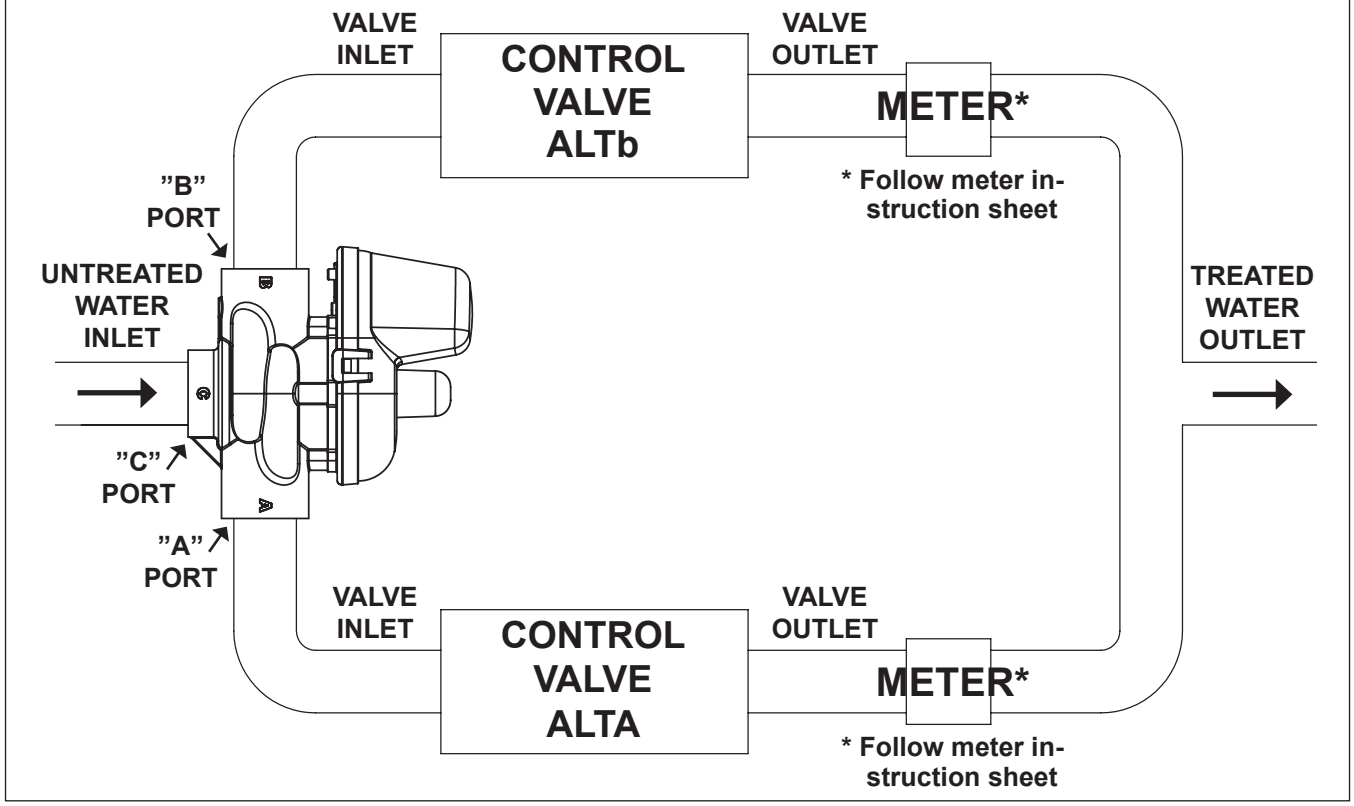

1.5” Piston Style MAV's (See Installation Instructions on Motorized Alternating Valves)

Order No. V3071 • Description: MOTOR ALT VLV 1.5 NPT REV2 or Order No. V3071BSPT • Description: MOTOR ALT VLV 1.5 BSPT REV2

Drawing No.	Order No.	Description	Quantity	
			V3071	V3071BSPT
1	V3073	MAV/NOHWBY COVER ASY	1	1
2	V3476	WS MOTOR ASY 8 FT	1	1
3	V3592	SCREW #8-1 PHPN T-25 SS	3	3
4	V3262-01	WS1.5&2ALT/2BY REDUCGEARCVRASY	1	1
5	V3110-01	WS1 DRIVE REDUCING GEAR PLAIN	3	3
6	V3264	WS2 BYPASS REDUCTION GEAR AXLE	3	3
7	V3527	SCREW 1/4-20 X 3/4 BHSCS SS (5/32” HEX ALLEN WRENCH REQUIRED)	4	4
8	V3072	MAV/NOHWBY 1/125/15 DRIVE ASY	1	1
9	V3506-01	MAV/NOHRD 1/125/15 PISTON	1	1
10	V3074	MAV 1/125/15 STACK ASY	1	1
11	V3525-01	MAV BODY 1.5 NPT	1	N/A
12	V3525BSPT-01	MAV BODY 1.5 BSPT	N/A	1
Not Shown	V3474	WS ALT CONNECT CORD 8FT BLK	1	1

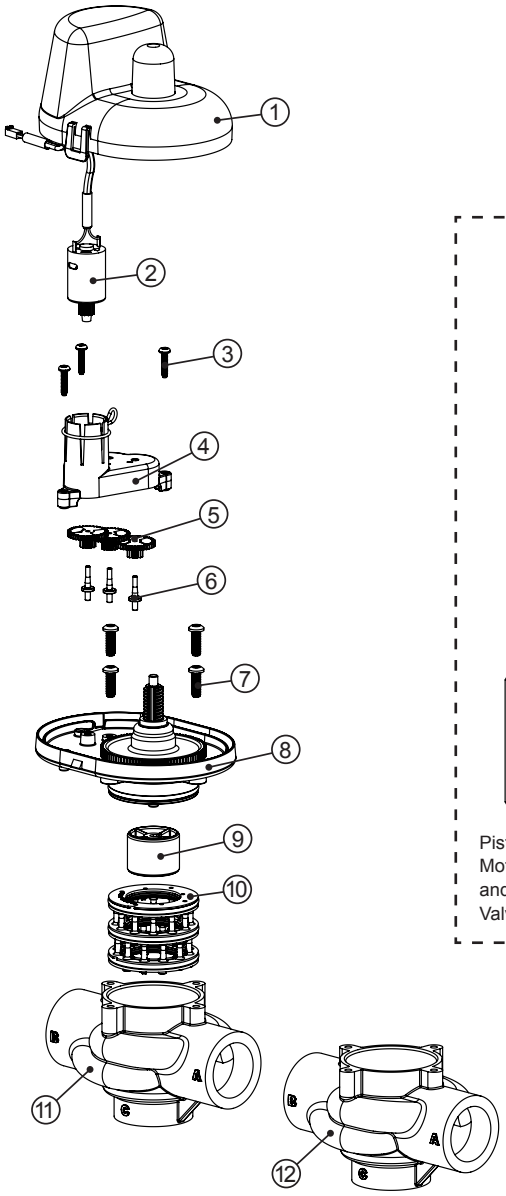

•Operating Pressures:
20 PSI Minimum / 125 PSI Maximum
•Operating Temperatures:
40°F Minimum / 110°F Maximum

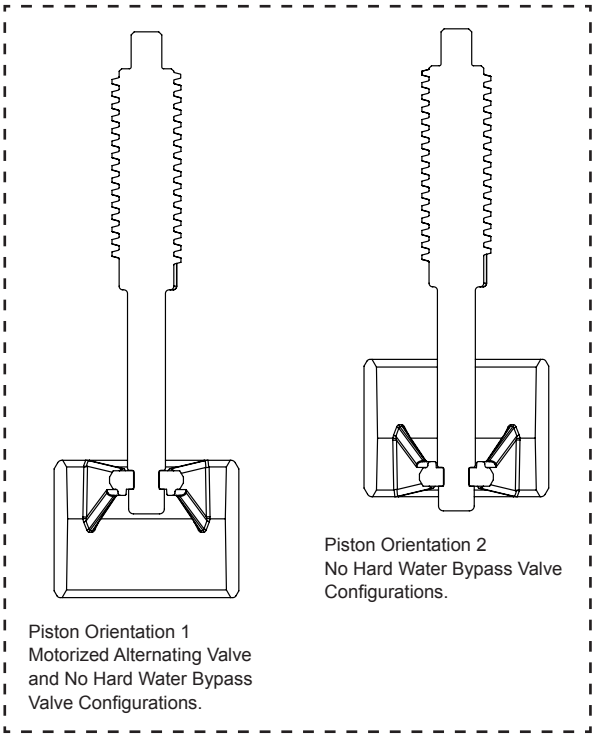

Piston Orientation 1
Motorized Alternating Valve and No Hard Water Bypass Valve Configurations.

Piston Orientation 2
No Hard Water Bypass Valve Configurations.

2" Piston Style MAV's (See Installation Instructions on Motorized Alternating Valves)

Order No. V3076 • Description: MOTOR ALT VLV 2 NPT REV2 or Order No. V3076BSPT • Description: MOTOR ALT VLV 2 BSPT REV2

Drawing No.	Order No.	Description	Quantity	
			V3076	V3076BSPT
1	V3073	MAV/NOHWBY COVER ASY	1	1
2	V3476	WS MOTOR ASY 8 FT	1	1
3	V3592	SCREW #8-1 PHPN T-25 SS	3	3
4	V3262-01	WS1.5&2ALT/2BY REDUCGEARCVRASY	1	1
5	V3110-01	WS1 DRIVE REDUCING GEAR PLAIN	3	3
6	V3264	WS2 BYPASS REDUCTION GEAR AXLE	3	3
7	V3642	SCREW 1/4-20 X 1 1/4 BHSCS SS (5/32" HEX ALLEN WRENCH REQUIRED)	4	4
8	V3078	MAV/NOHWBY 2 DRIVE ASY	1	1
9	V3634-01	MAV/NOHWBY 2 PISTON	1	1
10	V3077	WS2 MAV STACK ASY	1	1
11	V3633-01	WS2 MAV BODY NPT	1	N/A
	V3633-01BSPT	WS2 MAV BODY BSPT	N/A	1
Not Shown	V3474	WS ALT CONNECT CORD 8FT BLK	1	1

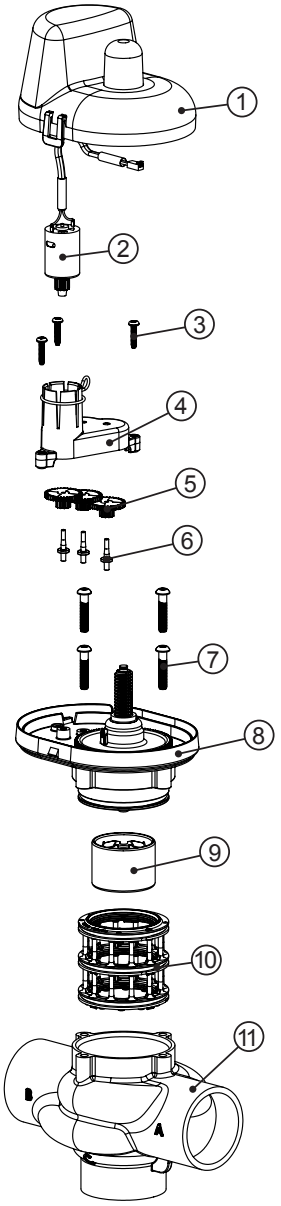

•Operating Pressures:
20 PSI Minimum / 125 PSI Maximum
•Operating Temperatures:
40°F Minimum / 110°F Maximum

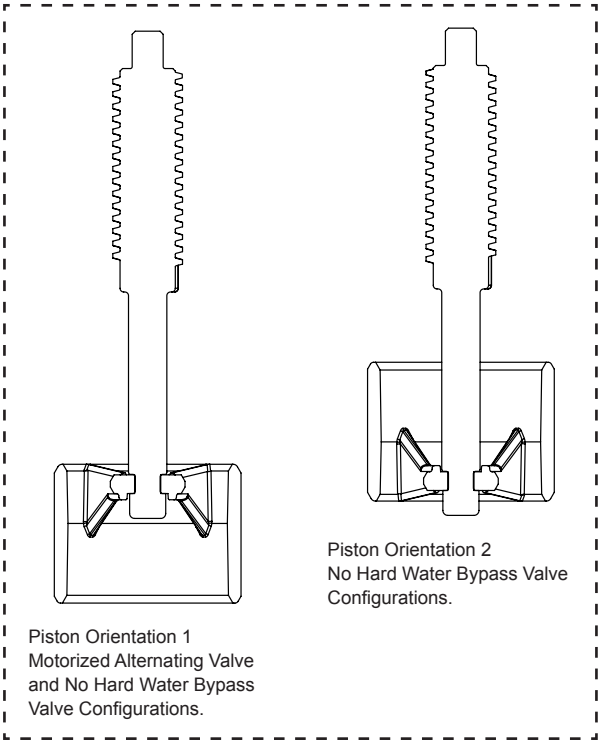

Piston Orientation 1
Motorized Alternating Valve and No Hard Water Bypass Valve Configurations.

Piston Orientation 2
No Hard Water Bypass Valve Configurations.

V3076 MAV and WS2 valves shown. Diagram is typical for WS1.5, WS2L, or WS2 valves using V3071 or V3076 piston style MAV's and regenerating with hard water.

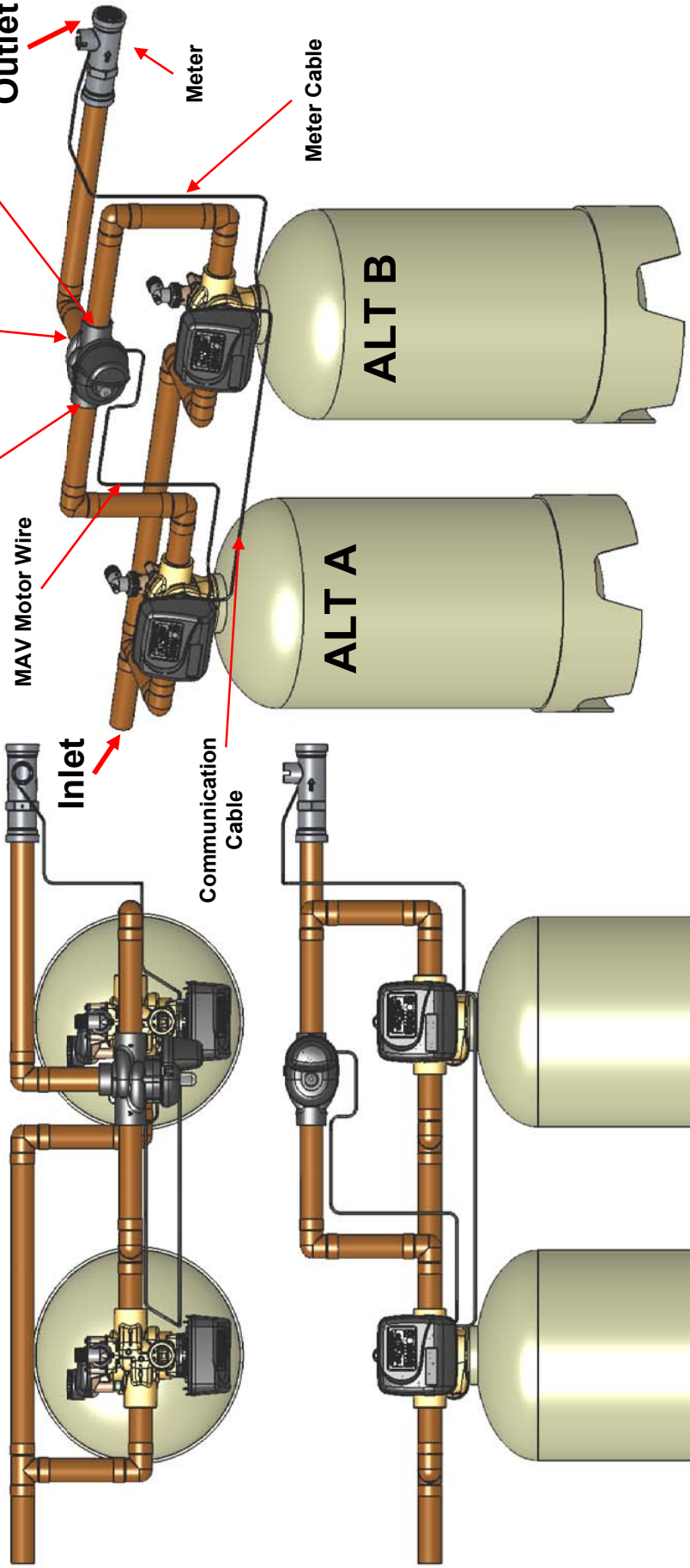

Note: These drawings are for reference. Installer needs to install inlet & outlet isolation ball valves for each control valve and a three valve bypass for the system. It is recommended to have some unions in the plumbing. Meter should be mounted horizontally or in a downflow vertical position to reduce bearing wear.

Order No. V3097 • Description: NO HARDWATERBYPASS 15INMXF NPT or Order No. V3097BSPT • Description: NOHARDWATERBYPASS 15INMXF BSPT

Drawing No.	Order No.	Description	Quantity	
			V3097	V3097BSPT
1	V3073	MAV/NOHWBY COVER ASY	1	1
2	V3476	WS MOTOR ASY 8 FT	1	1
3	V3592	SCREW #8-1 PHPN T-25 SS	3	3
4	V3262-01	WS1.5&2ALT/2BY REDUCGEARCVRASY	1	1
5	V3110-01	WS1 DRIVE REDUCING GEAR PLAIN	3	3
6	V3264	WS2 BYPASS REDUCTION GEAR AXLE	3	3
7	V3527	SCREW 1/4-20 X 3/4 BHSCS SS (5/32" HEX ALLEN WRENCH REQUIRED)	4	4
8	V3072	MAV/NOHWBY 1/125/15 DRIVE ASY	1	1
9	V3506-01	MAV/NOHRD 1/125/15 PISTON	1	1
10	V3886	WS15 NHWBY STACK ASY	1	1
11	V3832-01	WS15 NHWBY BODY M X F NPT	1	N/A
	V3832BSPT-01	WS15 NHWBY BODY M X F BSPT	N/A	1
Not Shown	V3805	STRAIN RELIEF COVER KIT	1	1

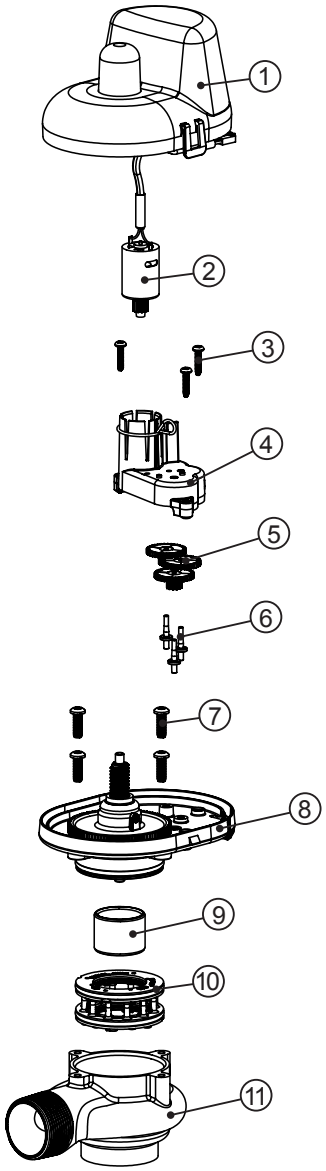

•Operating Pressures:
20 PSI Minimum / 125 PSI Maximum
•Operating Temperatures:
40°F Minimum / 110°F Maximum

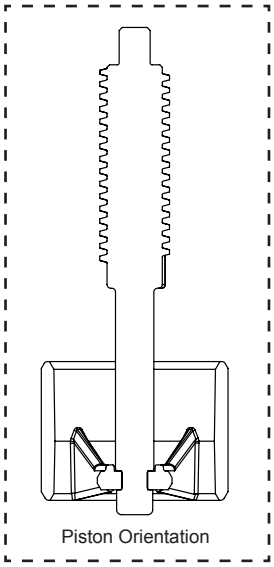

Order No. V3098 • Description: NO HARDWATERBYPASS 2INMXF NPT or Order No. V3098BSPT • Description: NO HARDWATERBYPASS 2INMXF BSPT

Drawing No.	Order No.	Description	Quantity	
			V3098	V3098BSPT
1	V3073	MAV/NOHWBY COVER ASY	1	1
2	V3476	WS MOTOR ASY 8 FT	1	1
3	V3592	SCREW #8-1 PHPN T-25 SS	3	3
4	V3262-01	WS1.5&2ALT/2BY REDUCGEARCVRASY	1	1
5	V3110-01	WS1 DRIVE REDUCING GEAR PLAIN	3	3
6	V3264	WS2 BYPASS REDUCTION GEAR AXLE	3	3
7	V3642	SCREW 1/4-20 X 1 1/4 BHSCS SS (5/32" HEX ALLEN WRENCH REQUIRED)	4	4
8	V3078	MAV/NOHWBY 2 DRIVE ASY	1	1
9	V3634-01	MAV/NOHWBY 2 PISTON	1	1
10	V3887	WS2 NHWBY STACK ASY	1	1
11	V3828-01	WS2 NHWBY BODY M X F NPT	1	N/A
	V3828BSPT-01	WS2 NHWBY BODY M X F BSPT	N/A	1
Not Shown	V3805	STRAIN RELIEF COVER KIT	1	1

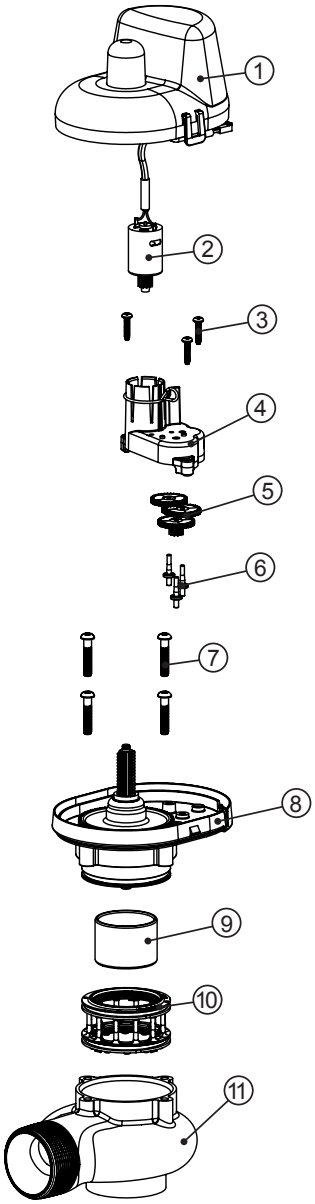

•Operating Pressures:
20 PSI Minimum / 125 PSI Maximum
•Operating Temperatures:
40°F Minimum / 110°F Maximum

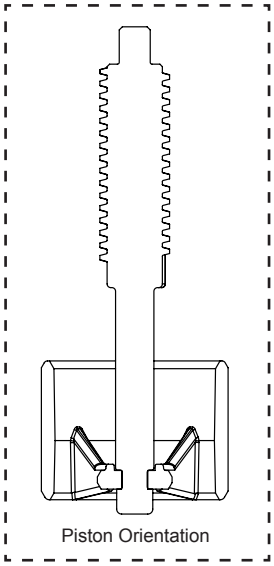

Revision History:

1/10/2018

PAGE 32:
Remove the word "PVC"

4/4/2018

PAGE 39:
Remove the word "PVC" - Elbow, 0.7 - 10 GPM

PAGE 42:
Remove the word "DRIVE" to "MAV" - The 8' alternator valve motor cable must be threaded through the back plate and connected to the two pin connector labeled MAV

7/19/2019

PAGE 36:
ORDER NO. V3010-15I - Metric Units - Corrected X and Y axis labels.

9/12/2019

PAGE 44:

10	V3074	MAV 1/125/15 STACK ASY	1	1

PAGE 45:

10	V3077	WS2 MAV STACK ASY	1	1

10/17/2019

PAGE 32:
Added to drawing - V3231-01 WS2H/3 REFILL FLOWCNTL RET ASY

11/15/2019

PAGE 33:
WS 1.5" Injectors - new injector/plug drawing

11/22/2019

PAGE 33:
WS 1.5" Injectors - removed "I" injector infomation

5/13/2020

PAGE 31:

6	V4349	WS15P INJECTOR CAP	1

2/22/2021

PAGE 52:
changed header to read "SOFTENER AND FILTER CONTROLS LIMITED WARRANTY"

CLACK CORPORATION
SOFTENER AND FILTER CONTROLS
LIMITED WARRANTY

Clack Corporation (”Clack”) warrants to OEM that its Softener and Filter Control Valves will be free from defects in material and workmanship under normal use and service for a period of five years from the date of shipment of such Valves from Clack’s plant in Windsor, Wisconsin when installed and operated within recommended parameters. No warranty is made with respect to defects not reported to Clack within the warranty period and/or defects or damages due to neglect, misuse, alterations, accident, misapplication, physical damage, or damage caused by fire, acts of God, freezing or hot water or similar causes. For outdoor installations where the Softener and Filter Control Valves are not under cover, the weather cover must be utilized for the warranty to be valid.

Clack’s obligation to OEM under this Limited Warranty shall be limited, at its option, to replacement or repair of any Softener and Filter Control valve covered by this Limited Warranty. Prior to returning a Control Valve, OEM must obtain a return goods authorization number from Clack and return the Control Valve freight prepaid. If any Control Valve is covered under this Limited Warranty, Clack shall return the Control Valve repaired, or its replacement, prepaid to the original point of shipment.

CLACK GIVES THIS WARRANTY TO OEM IN LIEU OF ALL OTHER WARRANTIES, EXPRESS OR IMPLIED, INCLUDING WITHOUT LIMITATION ANY IMPLIED WARRANTIES OF MERCHANTABILITY OR FITNESS FOR A PARTICULAR PURPOSE AND HEREBY EXPRESSLY DISCLAIMS ALL OTHER SUCH WARRANTIES. CLACK’S LIABILITY HEREUNDER SHALL NOT EXCEED THE COST OF THE PRODUCT. UNDER NO CIRCUMSTANCES WILL CLACK BE LIABLE FOR ANY INCIDENTAL OR CONSEQUENTIAL DAMAGES OR FOR ANY OTHER LOSS, DAMAGE OR EXPENSE OF ANY KIND, INCLUDING LOSS OF PROFITS, ARISING IN CONNECTION WITH THE INSTALLATION OR USE OR INABILITY TO USE THE CONTROL VALVES OR ANY WATER TREATMENT SYSTEM THE CONTROL VALVE IS INCORPORATED INTO.