Water Specialist 1.5” NPT or BSPT No Hard Water Bypass

Certified to NSF/ANSI 61 and 372.

Order No. V3097 • NPT
Order No. V3097BSPT • BSPT

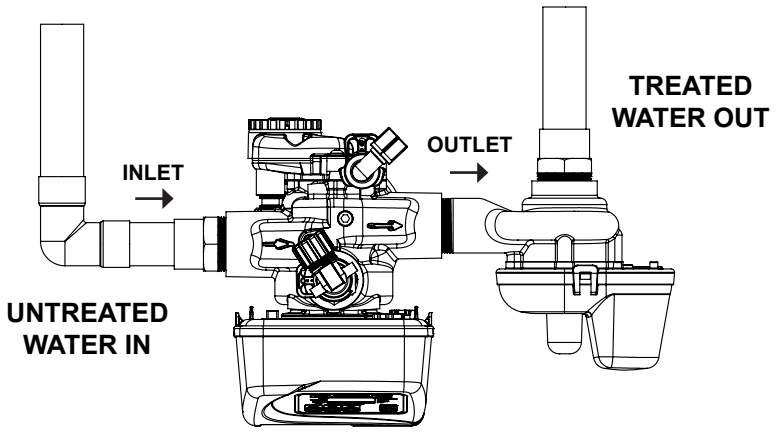

EXAMPLE OF A NO HARD WATER BYPASS CONFIGURATION

- 1.5” NPT or 1.5” BSPT
- Durable 316 stainless steel casting
- Hydraulically balanced piston valve
- Allows for WS1.5 Valves to be used in multi-tank systems
- Full 1.5” ports with minimal pressure loss
- Provides for no raw water bypass during regeneration
- Provides choices of treated or non-treated water regeneration
- Proven and reliable Clack DC drive assembly
- Low voltage drive assembly controlled by valve’s circuit board
- Flow from male inlet to female outlet has a 2.4 PSI drop at 60 GPM
- Operating Pressures:
  20 PSI Minimum
  125 PSI Maximum
- Operating Temperatures:
  40°F Minimum
  110°F Maximum

Order No. V3097 • Description: NO HARDWATERBYPASS 15INMXF NPT or
Order No. V3097BSPT • Description: NOHARDWATERBYPASS 15INMXF BSPT

Drawing No.	Order No.	Description	Quantity	
			V3097	V3097BSPT
1	V3073	MAV/NOHWBY COVER ASY	1	1
2	V3476	WS MOTOR ASY 8 FT	1	1
3	V3592	SCREW #8-3/4 PHPN T-25 SS	3	3
4	V3262-01	WS1.5&2ALT/2BY REDUCGEARCVRASY	1	1
5	V3110-01	WS1 DRIVE REDUCING GEAR PLAIN	3	3
6	V3264	WS2 BYPASS REDUCTION GEAR AXLE	3	3
7	V3527	SCREW 1/4-20 X 3/4 BHSCS SS (5/32" HEX ALLEN WRENCH REQUIRED)	4	4
8	V3072	MAV/NOHWBY 1/125/15 DRIVE ASY	1	1
9	V3506-01	MAV/NOHRD 1/125/15 PISTON	1	1
10	V3886	WS15 NHWBY STACK ASY	1	1
11	V3832-01	WS15 NHWBY BODY M X F NPT	1	N/A
	V3832BSPT-01	WS15 NHWBY BODY M X F BSPT	N/A	1
Not Shown	V3805	STRAIN RELIEF COVER KIT	1	1

*12	V3042	WS1/1.25/1.5 MAV & NHWB SERVICE PACK

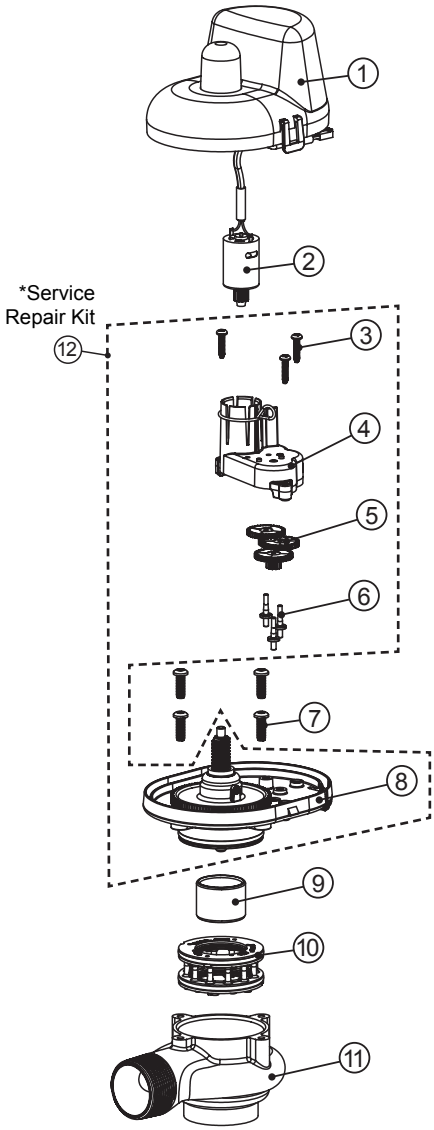

•Operating Pressures:
20 PSI Minimum / 125 PSI Maximum
•Operating Temperatures:
40°F Minimum / 110°F Maximum

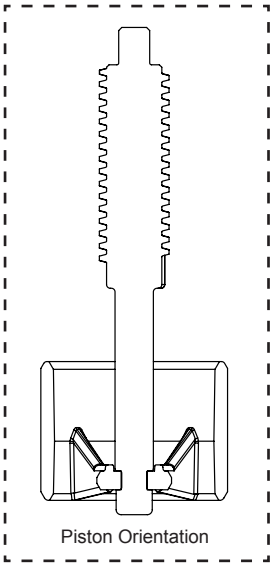

Clack Corporation
www.clackcorp.com
4462 DURAFORM LANE • WINDSOR, WISCONSIN 53598-9716 USA
PHONE (608) 846-3010 FAX (608) 846-2586 SALES/CUSTOMER SERVICE FAX (800) 755-3010

Form No. 2938 • 1/9/2019