© NBN - Licentie alleengebruik: SA Euraqua Europe, 7202001429

ICS: 23.060.01

Geregistreerde Belgische norm

NBN EN 1267

2e uitg., maart 2012

Normklasse: E 29

Industriële afsluiters - Beproeving van de stromingsweerstand met water als beproevingsfluïdum

Robinetterie industrielle - Essai de résistance à l'écoulement utilisant l'eau comme fluide d'essai

Industrial valves - Test of flow resistance using water as test fluid

Toelating tot publicatie: 23 maart 2012

Vervangt NBN EN 1267 (1999).

Deze Europese norm EN 1267:2012 heeft de status van een Belgische norm.

Deze Europese norm bestaat in drie officiële versies (Duits, Engels, Frans).

Bureau voor Normalisatie - Birminghamstraat 131 - 1070 Brussel - België
Tel: +32 2 738 01 12 - Fax: +32 2 733 42 64 - E-mail: info@nbn.be - NBN Online: www.nbn.be
Bank 000-3255621-10 IBAN BE41 0003 2556 2110 BIC BPOTBEB1 BTW BE0880857592

© NBN 2012

Prijsgroep: 18

© NBN - Licentie alleengebruik: SA Euraqua Europe, 7202001429

ICS: 23.060.01

norme belge enregistrée

NBN EN 1267

2e éd., mars 2012

Indice de classement: E 29

Robinetterie industrielle - Essai de résistance à l'écoulement utilisant l'eau comme fluide d'essai

Industriële afsluiters - Beproeving van de stromingsweerstand met water als beproevingsfluïdum

Industrial valves - Test of flow resistance using water as test fluid

Autorisation de publication: 23 mars 2012

Remplace NBN EN 1267 (1999).

La présente norme européenne EN 1267:2012 a le statut d'une norme belge.

La présente norme européenne existe en trois versions officielles (allemand, anglais, français).

Bureau de Normalisation - Rue de Birmingham 131 - 1070 Bruxelles - Belgique
Tél: +32 2 738 01 12 - Fax: +32 2 733 42 64 - E-mail: info@nbn.be - NBN Online: www.nbn.be
Banque 000-3255621-10 IBAN BE41 0003 2556 2110 BIC BPOTBEB1 TVA BE0880857592

© NBN 2012

Prix: groupe 18

© NBN - Licentie alleengebruik: SA Euraqua Europe, 7202001429

EUROPEAN STANDARD

NORME EUROPÉENNE

EUROPÄISCHE NORM

EN 1267

January 2012

ICS 23.060.01

Supersedes EN 1267:1999

English Version

Industrial valves - Test of flow resistance using water as test fluid

Robinetterie industrielle - Essai de résistance à l'écoulement utilisant l'eau comme fluide d'essai

Industriearmaturen - Messung des Strömungswiderstandes mit Wasser als Prüfmedium

This European Standard was approved by CEN on 26 November 2011.

CEN members are bound to comply with the CEN/CENELEC Internal Regulations which stipulate the conditions for giving this European Standard the status of a national standard without any alteration. Up-to-date lists and bibliographical references concerning such national standards may be obtained on application to the CEN-CENELEC Management Centre or to any CEN member.

This European Standard exists in three official versions (English, French, German). A version in any other language made by translation under the responsibility of a CEN member into its own language and notified to the CEN-CENELEC Management Centre has the same status as the official versions.

CEN members are the national standards bodies of Austria, Belgium, Bulgaria, Croatia, Cyprus, Czech Republic, Denmark, Estonia, Finland, France, Germany, Greece, Hungary, Iceland, Ireland, Italy, Latvia, Lithuania, Luxembourg, Malta, Netherlands, Norway, Poland, Portugal, Romania, Slovakia, Slovenia, Spain, Sweden, Switzerland, Turkey and United Kingdom.

EUROPEAN COMMITTEE FOR STANDARDIZATION
COMITÉ EUROPÉEN DE NORMALISATION
EUROPÄISCHES KOMITEE FÜR NORMUNG

Management Centre: Avenue Marnix 17, B-1000 Brussels

© 2012 CEN All rights of exploitation in any form and by any means reserved worldwide for CEN national Members.

© NBN - Licentie alleengebruik: SA Euraqua Europe, 7202001429

Contents

Page

Foreword 4

1 Scope 5

2 Normative references 5

3 Terms and definitions 5

4 Test facility 6
4.1 General 6
4.2 Test tube lengths 8
4.3 Test tube sizes 8
4.3.1 Steel test tubes 8
4.3.2 Copper test tubes 9
4.4 Pressure tappings 9
4.5 Measurement devices 10
4.6 Test fluid 10

5 Test procedure 10
5.1 Test conditions 10
5.1.1 Permissible measurement fluctuations 10
5.1.2 Steady conditions 11
5.1.3 Permissible non-steady conditions 11
5.2 Pressure loss in test tubes 11
5.3 Valve test 12

6 Calculation 13
6.1 Valve pressure loss determination 13
6.2 Coefficient calculations 14
6.2.1 Flow resistance coefficient ζ (zeta) 14
6.2.2 Flow coefficient, K_v 14
6.2.3 Flow coefficient, C_v 14
6.3 Uncertainty 15
6.3.1 Total measurement uncertainty 15
6.3.2 Flow coefficients, K_v and C_v 15
6.3.3 Pressure loss coefficient, ζ (zeta) 16

7 Test report 16

Annex A (informative) **Lower ζ limit considerations** 18

Annex B (informative) **Flow rate and physical phenomena of flow through a valve** 19
B.1 General 19
B.2 Normal flow conditions 20
B.3 Cavitation 21
B.4 Flashing (self-vaporizations) 21

Annex C (informative) **Uncertainty on measurement** 22
C.1 Introduction 22
C.2 Permissible measurement fluctuations 22
C.2.1 General 22
C.2.2 Direct visual observation of signals delivered by the systems 22
C.2.3 Automatic recording of signals delivered by measurement systems 23
C.2.4 Automatic integration of signals delivered by the measurement systems 24
C.3 Measured value stability on physical quantities 25
C.4 Determining flow rate and pressure loss coefficients in turbulent rating condition 26

Annex D (informative) **Evaluation of uncertainty of flow rate coefficient (K_v) and pressure losses coefficient (ζ)** 27
D.1 Generality 27
D.2 Evaluation of measurement uncertainty of the K_v (C_v) 27

© NBN - Licentie alleengebruik: SA Euraqua Europe, 7202001429

D.2.1 Determination of flow rate coefficient 27
D.2.2 Identification of uncertainty of input quantities 28
D.2.3 Sensitivity coefficient 28
D.2.4 Type A evaluation uncertainty 29
D.2.5 Expression of relative uncertainty 29
D.3 Evaluation of measurement uncertainty of the ζ 30
D.3.1 Determination of flow resistance coefficient 30
D.3.2 Identification of uncertainty of input quantities 30
D.3.3 Sensitivity coefficient 30
D.3.4 Type A evaluation uncertainty 32
D.4 Expression of relative uncertainty on ζ 32

Bibliography 33

© NBN - Licentie alleengebruik: SA Euraqua Europe, 7202001429

Foreword

This document (EN 1267:2012) has been prepared by Technical Committee CEN/TC 69 “Industrial valves”, the secretariat of which is held by AFNOR.

This European Standard shall be given the status of a national standard, either by publication of an identical text or by endorsement, at the latest by July 2012, and conflicting national standards shall be withdrawn at the latest by July 2012.

Attention is drawn to the possibility that some of the elements of this document may be the subject of patent rights. CEN [and/or CENELEC] shall not be held responsible for identifying any or all such patent rights.

This document supersedes EN 1267:1999.

The main changes compared to the previous edition are the following:

a) the scope was specified and editorially revised;

b) the normative references were updated;

c) Clause 3 on terms and definitions was revised;

d) Clause 4 on test facility was changed;

e) Clause 5 on test procedure was changed;

f) Annex A on lower ζ limit considerations was revised;

g) Annex D on evaluation of uncertainty of flow rate coefficient (K_v) and pressure losses coefficient (ζ) was added;

h) a bibliography was added.

According to the CEN/CENELEC Internal Regulations, the national standards organizations of the following countries are bound to implement this European Standard: Austria, Belgium, Bulgaria, Croatia, Cyprus, Czech Republic, Denmark, Estonia, Finland, France, Germany, Greece, Hungary, Iceland, Ireland, Italy, Latvia, Lithuania, Luxembourg, Malta, Netherlands, Norway, Poland, Portugal, Romania, Slovakia, Slovenia, Spain, Sweden, Switzerland, Turkey and the United Kingdom.

© NBN - Licentie alleengebruik: SA Euraqua Europe, 7202001429

1 Scope

This European Standard specifies a method for determining valve pressure loss coefficient and fluid flow coefficient using water as test fluid. This method is suitable

— for valves with low zeta values but higher than 0,1 by determining pressure loss, with respect to fluid flow rate and specific gravity, and

— for valves with equal inlet and outlet nominal size.

Industrial process control valves are excluded from this European Standard.

NOTE 1 For zeta values above 6, the pressure loss coefficient inaccuracy is higher than the pressure loss caused by the test tubes. It becomes the same configuration of tests as in EN 60534-2-3.

NOTE 2 If using air as test fluid, other standards e.g. EN 60534-2-3 and ISO 6358 should be referred to.

2 Normative references

The following referenced documents are indispensable for the application of this document. For dated references, only the edition cited applies. For undated references, the latest edition of the referenced document (including any amendments) applies.

EN 736-1:1995, *Valves — Terminology — Part 1: Definition of types of valves*

EN 736-3:2008, *Valves — Terminology — Part 3: Definition of terms*

EN 1057, *Copper and copper alloys — Seamless, round copper tubes for water and gas in sanitary and heating applications*

EN 24006:1993, *Measurement of fluid flow in closed conduits — Vocabulary and symbols (ISO 4006:1991)*

EN ISO 6708:1995, *Pipework components — Definition and selection of DN (nominal size) (ISO 6708:1995)*

ISO 7-1:1994, *Pipe threads where pressure-tight joints are made on the threads — Part 1: Dimensions, tolerances and designation*

ISO 7194:2008, *Measurement of fluid flow in closed conduits — Velocity-area methods of flow measurement in swirling or asymmetric flow conditions in circular ducts by means of current-meters or Pitot static tubes*

3 Terms and definitions

For the purposes of this document, the following terms and definitions apply.

3.1
flow coefficient
K_v or C_v

[EN 736-3:2008, 3.4.1]

© NBN - Licentie alleengebruik: SA Euraqua Europe, 7202001429

3.2

flow resistance coefficient
ζ

[EN 736-3:2008, 3.4.5]

3.3
fluctuations
low period modifications of the measured value of a physical quantity around its mean value during the measurement reading time

3.4
nominal diameter
DN

[EN ISO 6708:1995, 2.1]

3.5
stability
stability, or the permanent rating conditions, which is reached, when the variations or value changes for these same physical quantities are low enough between a given reading and the next one

3.6
types of valves

[EN 736-1:1995]

3.7
uncertainty

[EN 24006:1993, 5.26]

4 Test facility

4.1 General

A basic flow test facility is shown in Figure 1. The position of components outside the frame may be determined by the laboratory.

For angle valves (Figure 1 b)), the tested valve and the tube section (L_3 length) may be laid either vertically or horizontally.

For multi-way valves, additional test tubes of the same type shall be used, in the same conditions.

© NBN - Licentie alleengebruik: SA Euraqua Europe, 7202001429

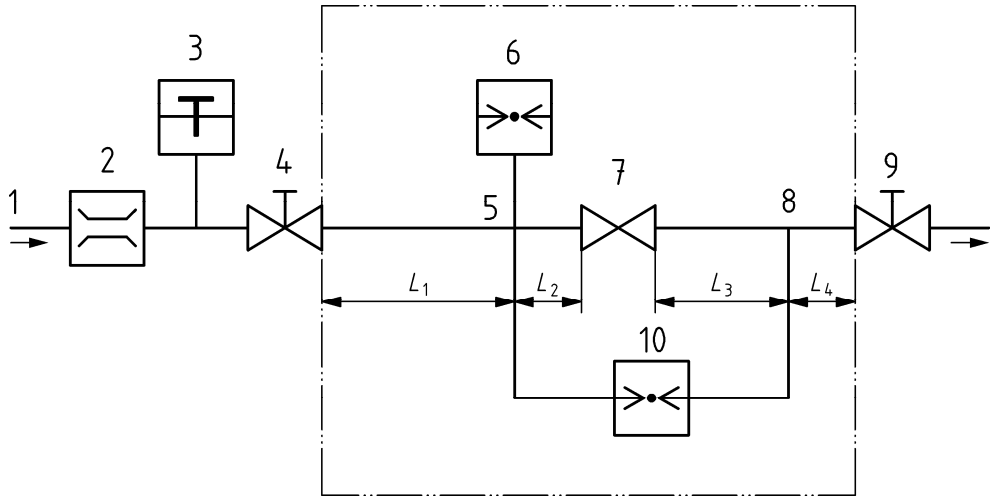

NOTE L_1 and $L_3 \geq 10\ D$ and L_2 and $L_4 \geq 2\ D$.

a) Straight valves

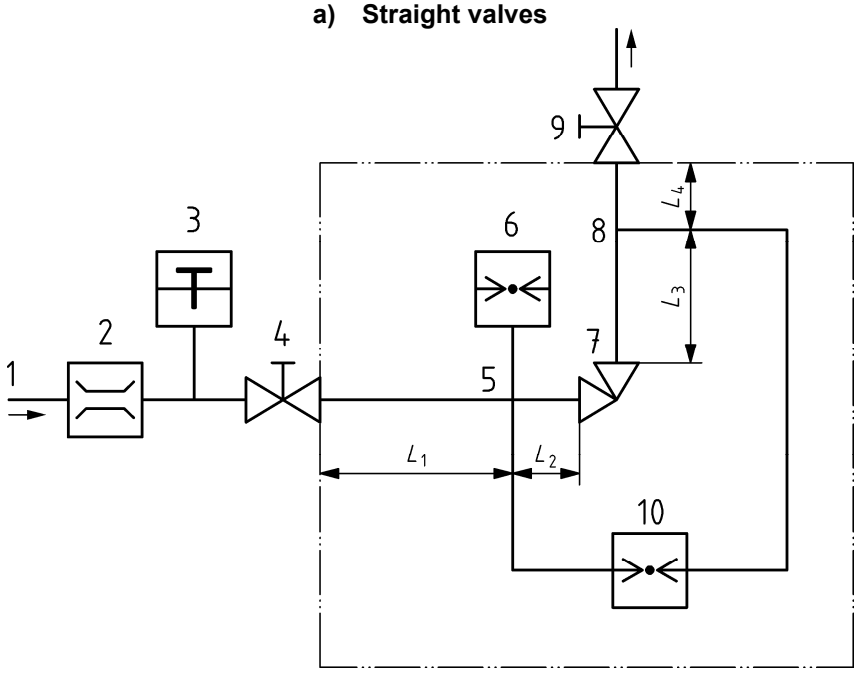

b) Angle or multiport valves

Key

1 water supply
2 flow meter
3 temperature measurement
4 regulating valve
5 upstream pressure tapping point
6 upstream pressure measuring device
7 valve under test
8 downstream pressure tapping point
9 regulating valve
10 differential pressure measuring device

Figure 1 — Test installation

© NBN - Licentie alleengebruik: SA Euraqua Europe, 7202001429

4.2 Test tube lengths

The test tube lengths and the pressure measurement point positions shall comply with Figure 1. Lengths are measured from test tube ends.

If the test facility includes two elbows in series in different planes upstream, a link L_1 greater than 10 D, shall be adopted unless straightener is installed before the upstream test tube. If a flow straightener is used, length L_1 may be smaller than 10 D, provided that the conditions in 5.1 are met.

For other details concerning flow straighteners, refer to ISO 7194:2008, Clause 6.

4.3 Test tube sizes

4.3.1 Steel test tubes

The test tubes (dimensions DN 8 to DN 150) can be threaded with an external taper thread as per ISO 7-1 (but with the pressure tap length indicated in Table 1) for use with threaded end valves, and also in order to adapt threaded flanges for flanged valves.

Table 1 — Tube sizes

Nominal size of valve DN	Nominal size of tube mm	Thread size	Gauge length mm
8	13,5 × 2,3	¼	11,0
10	17,2 × 2,3	⅜	11,5
15	21,3 × 2,6	½	15,0
20	26,9 × 2,6	¾	16,5
25	33,7 × 3,2	1	19,0
32	42,4 × 3,2	1 ¼	21,5
40	48,3 × 3,2	1 ½	21,5
50	60,3 × 3,6	2	25,5
65	76,1 × 3,6	2 ½	30,0
80	88,9 × 4,0	3	33,0
100	114,3 × 4,5	4	39,0
125	139,7 × 5,0	5	43,5
150	165,1 × 5,0	6	43,5
200	219,1 × 3,6		
250	273,0 × 4,0		
300	323,9 × 4,5		
350	355,6 × 5,0		
400	406,4 × 5,0		
450	457,0 × 5,0		
500	508,0 × 5,6		
600	610,0 × 6,3		

NOTE The nominal dimensions of DN 8 to DN 150 are in accordance with ISO 65, medium series and ISO 7598. The nominal dimensions of DN 200 to DN 600 are in accordance with ISO 4200, series C and EN ISO 1127.

© NBN - Licentie alleengebruik: SA Euraqua Europe, 7202001429

4.3.2 Copper test tubes

Table 2 — Copper test tubes

Nominal size of valve DN	Nominal size of tube mm
8	10 × 0,8
10	12 × 1,0
15	15 × 1,0
15/20	18 × 1,0
20	22 × 1,0
25	28 × 1,5
32	35 × 1,5
40	42 × 1,5
50	54 × 1,5

Dimensions and tolerances shall be in accordance with EN 1057.

Test tubes shall be straight. Their ends shall be cut square and deburred. Their internal surfaces shall be cleaned and free from obstructions visible to the naked eye. Inner diameters are determined by the valve manufacturer unless otherwise specified in a valve, product or application standard. For valves with low ζ coefficient, the results obtained are affected by the test tube inner diameter. Therefore, the actual test tube inner diameter shall be mentioned (see Clause 7 b)).

NOTE When new test tubes are made, it is recommended to make them in accordance with Table 1 and Table 2.

4.4 Pressure tappings

The number of pressure taps is determined by the laboratory. At each pressure measurement section, there can be one, two or four tabs or a slot, provided that eccentricity is controlled. There should be four measurement taps for sizes greater than DN 300.

Pressure tap diameters shall comply with Table 3 and length shall be at least twice the diameter. The measurement tap hole on test tube internal surface is sharp-edged and free from burrs. The measurement tape hole centreline cuts the axis of the test tube. The pressure tap hole centreline is square to axis with a maximum tolerance of 5°. The inner diameter of connection tubes between taps and pressure measurement devices shall be at least twice the pressure tap hole diameter. To avoid dirt accumulation, no tap shall be located at measurement section bottom.

Table 3 — Pressure tap hole diameter

DN	Minimum mm	Maximum mm
< 20	1,5	2
20 to 50	2	3
> 50	3	5

© NBN - Licentie alleengebruik: SA Euraqua Europe, 7202001429

4.5 Measurement devices

The pressure loss shall be measured with a differential pressure sensor.

The sensors or methods known further to calibration or by reference to other standards, providing measurements whose systematic uncertainty does not exceed the maximum permissible values, shall be used.

The accuracy of measurement shall be

a) upstream pressure, differential pressure and flow rate: ± 2 % of the read value,

b) temperature measurement: ± 1 °C.

4.6 Test fluid

Test fluid shall be water with a temperature between 5 °C and 40 °C.

5 Test procedure

5.1 Test conditions

5.1.1 Permissible measurement fluctuations

The permissible measurement fluctuation amplitude of each measurement value is given in Tables 4 and 5.

If the fluctuations amplitude is greater than these values, the measurements shall be performed through a damper device. The damper installation shall not affect measurement accuracy: use a linear, symmetrical response device.

Table 4 — Differential pressure fluctuations

Value of ζ	Fluctuations on Δp %
$\zeta > 20$	± 6
$4 < \zeta \leq 20$	± 10
$1 < \zeta \leq 4$	± 17
$0{,}1 \leq \zeta \leq 1$	± 26

Table 5 — Flow rate and pressure fluctuations

Quantity	Symbol	Fluctuations %
Flow rate	e_q	± 6
Upstream pressure	e_p	± 6

NOTE More information about accuracy is given in Annex C.

© NBN - Licentie alleengebruik: SA Euraqua Europe, 7202001429

5.1.2 Steady conditions

Test conditions are referred to as steady if the mean values of all measured values are time-independent. Practically, test conditions may be considered as steady if the variations of each value observed at the test operating point for at least 10 s, do not exceed 1,2 % (difference between larger and smaller values read for a quantity versus mean value).

If this condition is met and the fluctuations are lower than the limit values in 5.1.1, one single measurement shall be recorded for a given operating point.

5.1.3 Permissible non-steady conditions

When test conditions are not steady, the following procedure shall apply.

At each tested operating point, repetitive readings of the measured quantities shall be performed at random time intervals exceeding 10 s. At least three series of measurement acquisitions shall be performed for each operating point.

The percentage difference between the largest and the smallest value for each measurement shall not exceed the percentage indicated in Table 6. This leads to an uncertainty in accordance with 6.3.1.

Table 6 — Difference between the largest and smallest values

Number of measurement series	Permissible difference to mean value %
3	1,8
5	3,5
7	4,5
9	5,8
13	5,9
> 30	6,0

The arithmetic mean of all measurements shall be taken as measured value in the scope of the test.

If excessive variations cannot be avoided, the uncertainty may be calculated by statistic analysis.

5.2 Pressure loss in test tubes

In order to eliminate the pressure loss of the test tubes between the upstream and downstream pressure taps from the characteristic for the tested valve, the pressure loss associated with flow rate from that tube portion may be determined as follows.

For each test tube nominal dimension, connect the tubes concentrically to each other without gap between ends in the test section indicated in Figure 1.

Provide a suitable water flow rate in the test facility to eliminate any entrapped air pockets.

Record a series of associated flow rate and pressure loss values in the same operating flow rate range used for the valve test.

Determine the relationship between test tube flow rate and pressure loss. Test this relationship again periodically, notably if the internal surface condition of the tubes has changed significantly.

© NBN - Licentie alleengebruik: SA Euraqua Europe, 7202001429

When the ζ coefficient of the valve is very low, it is recommended to measure, during the same test campaign, the pressure loss of the tubes and the pressure loss of the valve-tube assembly with the same configuration, and the same measurement devices.

When the ζ coefficient of the valve is high, other test tube pressure loss determination methods can be used, provided that the uncertainty is in accordance with the requirements of 5.1.

NOTE More information on test tubes ζ coefficient is given in Annex A.

5.3 Valve test

The valve flow characteristics are determined by mounting the valve on the test facility as shown in Figure 1. The obtained flow characteristics include those of the test tubes which have to be subtracted. The characteristics of the test tubes shall be measured according to 5.2.

For valves with internally threaded ends (as per ISO 7-1), the engaged thread length of screwed parts between test tubes and valve shall be as indicated in Table 7.

For valves with other threaded lengths, the engaged thread length shall be the entire useful threaded length of the valve.

For valves with capillarity- or compression-type ends, the tubes used shall be mounted in thrust abatement in the valve body.

For flanged valves, connection shall be aligned without offset between the test facility flange face and the tube on which it is secured, and the fluid path shall not be obstructed by the gaskets.

Provide a water flow rate so that all air is purged off the facility.

The test can be performed differently according to the valve type, the scope and the specifications of the applicable product standard or of the application standard, as follows:

a) determining the pressure loss for a given flow rate;

b) determining the pressure loss in a range of flow rate values;

c) determining the flow rate for a given pressure loss;

d) determining the flow rate in a range of pressure loss values;

e) determining one or more coefficients measured under different flows, in turbulent flow conditions.

NOTE More information on turbulent flow and vaporisation conditions is given in Annex B.

When a valve is tested to determine its flow coefficient in turbulent conditions:

— measurements shall be performed for at least three different flow rate values;

— the minimum flow rate value shall be determined so that the Reynolds number always exceeds 4×10^4;

— the maximum flow rate value shall be greater than the upper value of the operating range specified by the manufacturer. If this limit cannot be reached by the test facility, the test laboratory shall establish that the maximum attainable flow rate value of its facility is satisfactory to obtain results within accuracy compatible to this European Standard;

— an intermediate flow rate value between maximum and minimum shall be determined.

© NBN - Licentie alleengebruik: SA Euraqua Europe, 7202001429

The permissible difference between the maximum and minimum flow coefficient values shall not exceed 4 % (see examples hereto).

If the difference exceeds this tolerance, it can be due to vaporisation. Therefore, the test shall be repeated with a higher upstream pressure value.

If the difference is within tolerance, the flow coefficient in turbulent flow conditions is the average between the three calculated flow coefficient values.

Vaporisation shall be avoided unless in contradiction with the product standard or the application standard.

For each test, the pressure loss in the test tubes shall be subtracted from the total measured pressure loss.

Table 7 — Engaged thread length

Thread dimension, ISO 7-1	**¼**	**⅜**	**½**	**¾**	**1**	**1¼**	**1½**	**2**	**2½**	**3**	**4**	**5**	**6**
Engaged thread length [a] mm	10,0	10,5	14,0	15,5	18,0	20,5	20,5	24,5	28,5	31,5	37,5	42,0	42,0
Tolerance mm	± 1	± 1	± 1	± 1	± 1	± 1	± 1	± 1	± 1,5	± 1,5	± 1,5	± 1,5	± 1,5
[a] The maximum engaged thread length shall be equal to that stated in column 16 of ISO 7-1:1994.													

6 Calculation

6.1 Valve pressure loss determination

$$\Delta p_{\mathrm{v}} = \Delta p_{\mathrm{v+t}} - \Delta p_{\mathrm{t}} \tag{1}$$

where

Δp_{v} is the pressure loss in the valve itself, in bar;

$\Delta p_{\mathrm{v+t}}$ is the pressure loss in the test tubes and in the valve, in bar;

Δp_{t} is the pressure loss in the tubes, measured without the valve, in bar.

These three pressure loss values refer to the same flow rate value.

© NBN - Licentie alleengebruik: SA Euraqua Europe, 7202001429

6.2 Coefficient calculations

6.2.1 Flow resistance coefficient ζ (zeta)

$$\zeta = \frac{2 \times \Delta p_v}{\rho \times u^2} \tag{2}$$

where

Δp_v is the pressure loss in the valve, in Pascal (Pa) (1 Pa = 10^{-5} bar);

u is the mean water velocity, in meters per second (m/s);

ρ is the density of water, in kilogram per cubic meter (kg/m^3).

To determine the actual measured ζ value, Equation (4) is used for mean velocity rate calculation:

$$u = \frac{q \times 10^6}{\left(\frac{\pi D^2}{4}\right)} \tag{3}$$

where

q is the flow rate, in cubic meters per second (m^3/s);

D is the inner diameter of the test tube, in millimetres (mm).

Practically and for reference, ζ is based on a diameter equal to DN. The mean velocity is then calculated according to Equation (4) with D equal to the value of DN.

6.2.2 Flow coefficient, K_v

$$K_v = q_v \sqrt{\frac{\rho}{\Delta p_v \rho_0}} \tag{4}$$

where

q_v is the flow rate, in cubic meter per hour (m^3/h);

ρ is the density of water, in kilogram per cubic meter (kg/m^3);

ρ_0 is the density of water at 15 °C, in kilogram per cubic meter (kg/m^3);

Δp_v is the pressure loss in the valve, in bar.

6.2.3 Flow coefficient, C_v

$$C_v = 1{,}16 \times K_v \tag{5}$$

© NBN - Licentie alleengebruik: SA Euraqua Europe, 7202001429

6.3 Uncertainty

6.3.1 Total measurement uncertainty

6.3.1.1 Differential pressure

As mentioned in 5.1.3, the random uncertainty, the total uncertainty and any other uncertainty on differential pressure measurement increase with the increase of fluctuation amplitude. Consequently, the permissible total uncertainty error value on measurement depends on ζ value as shown in Table 8.

Table 8 — Maximum uncertainty value on differential pressure measurement

ζ value	Symbol	Uncertainty %
$\zeta > 20$	$e\Delta p$	± 3,5
$4 < \zeta \leq 20$	$e\Delta p$	± 6
$1 < \zeta \leq 4$	$e\Delta p$	± 10
$0{,}1 \leq \zeta \leq 1$	$e\Delta p$	± 15

6.3.1.2 Other quantities

Total error on flow rate, upstream pressure and temperature are shown in Table 9.

Table 9 — Maximum uncertainty values on flow rate measurement, upstream pressure and temperature

Quantity	Symbol	Uncertainty
Flow rate	e_q	± 3,5 %
Upstream pressure	e_p	± 3,5 %
Temperature	Δt	± 1 °C [a]
[a] For temperature measurement, random uncertainty is negligible versus systematic error.		

The total uncertainty of coefficients can now be calculated through the method given in Annex D.

6.3.2 Flow coefficients, K_v and C_v

$$e_{K_V} = 2\sqrt{\left(\frac{a_{Q_V}}{2}\frac{\Delta Q_V}{Q_V}\right)^2 + \left(\frac{a_{\Delta P}}{2}\frac{\Delta\Delta P}{\Delta P}\right)^2 + \left(\frac{a_\rho}{1{,}73}\frac{\Delta\rho}{\rho}\right)^2 + \left(\frac{a_{\rho 0}}{1{,}73}\frac{\Delta\rho_0}{\rho_0}\right)^2 + \left(\frac{\sigma_{K_V}}{K_v}\right)^2} \quad (6)$$

$$e_{C_V} = 2\sqrt{\left(\frac{a_{Q_V}}{2}\frac{\Delta Q_V}{Q_V}\right)^2 + \left(\frac{a_{\Delta P}}{2}\frac{\Delta\Delta P}{\Delta P}\right)^2 + \left(\frac{a_\rho}{1{,}73}\frac{\Delta\rho}{\rho}\right)^2 + \left(\frac{a_{\rho 0}}{1{,}73}\frac{\Delta\rho_0}{\rho_0}\right)^2 + \left(\frac{\sigma_{C_V}}{C_v}\right)^2} \quad (7)$$

The maximum allowable uncertainties on coefficients resulting from total measurement uncertainty as stated in 6.3.1 are indicated in Table 10.

© NBN - Licentie alleengebruik: SA Euraqua Europe, 7202001429

Table 10 — Total uncertainty on flow coefficients

ζ value	Symbol	Uncertainty %
$\zeta > 20$	e_{Kv} or e_{Cv}	± 3,9
$4 < \zeta \leq 20$	e_{Kv} or e_{Cv}	± 4,6
$1 < \zeta \leq 4$	e_{Kv} or e_{Cv}	± 6,1
$0,1 \leq \zeta \leq 1$	e_{Kv} or e_{Cv}	± 8,3

6.3.3 Pressure loss coefficient, ζ (zeta)

$$e_{\zeta} = 2\sqrt{\left(\frac{a_{\Delta P}}{2}\frac{\Delta\Delta P}{\Delta P}\right)^2 + \left(\frac{a_u}{2}\frac{\Delta u}{u}\right)^2 + \left(\frac{a_{\rho}}{1.73}\frac{\Delta\rho}{\rho}\right)^2 + \left(\frac{\sigma_{\zeta}}{\zeta}\right)^2} \quad (8)$$

The maximum allowable uncertainty on ζ coefficient resulting from total measurement uncertainty values as stated in 6.3.1 are indicated in Table 11.

Table 11 —Total uncertainty on pressure loss coefficient, ζ

ζ value	Symbol	Uncertainty %
$\zeta > 20$	e_{ζ}	± 7,8
$4 < \zeta \leq 20$	e_{ζ}	± 9,2
$1 < \zeta \leq 4$	e_{ζ}	± 12,2
$0,1 \leq \zeta \leq 1$	e_{ζ}	± 16,6

7 Test report

The test report shall include the following valve data, test data and test results.

a) Valve data:

— manufacturer's name;

— valve type (i.e. globe valve, non-return or check valve);

— valve DN (nominal diameter);

— valve PN and Class

— commercial designation and/or identification number;

— marking of valve.

© NBN - Licentie alleengebruik: SA Euraqua Europe, 7202001429

b) Test data:

— date of the test;

— reference to this European Standard, i.e. EN 1267;

— position of obturator;

— test tube inner diameter;

— fluid temperature;

— flow direction, if relevant;

— engaged thread length, if relevant;

— measuring instruments identification;

— gauge pressure, if relevant.

c) Test results: the test results and associated error, if applicable, shall be reported as defined by the relevant standard or the customer specification:

— measured values;

— graphics (e.g. pressure loss/flow rate; flow coefficient/opening);

— coefficients (ζ based on the D and DN).

© NBN - Licentie alleengebruik: SA Euraqua Europe, 7202001429

Annex A
(informative)

Lower ζ limit considerations

The flow is considered turbulent (Reynolds Number Re > 4 x 10^4) and the test tubes are considered smooth. The flow resistance coefficient ζ is given by the following relation:

$$\zeta = \frac{\lambda L}{D} \tag{A.1}$$

The friction factor λ (Darcy factor) is given by Colebrook equation for the turbulent flow:

$$\frac{1}{\sqrt{\lambda}} = -2\log\left(\frac{k/D}{3{,}1} + \frac{2{,}51}{Re\sqrt{\lambda}}\right) \tag{A.2}$$

Where k and D are respectively the pipe roughness and the pipe diameter. Obviously, the Colebrook Equation needs an iterative solution.

The friction factor λ is approximately 0,02 when the test tubes are considered as smooth industrial tubes (k / D = 0,001).

The overall test tube length is 12 D, therefore the flow resistance coefficient ζ can be expressed by:

$$\zeta = 12\,\lambda \tag{A.3}$$

The value of the flow resistance coefficient ζ is equal to 0,24.

However, the precision of this pressure loss determination as given in this European Standard is about 16,6 %.

The ration of overall pressure loss coefficient determination on their possible values is given in Figure A.1.

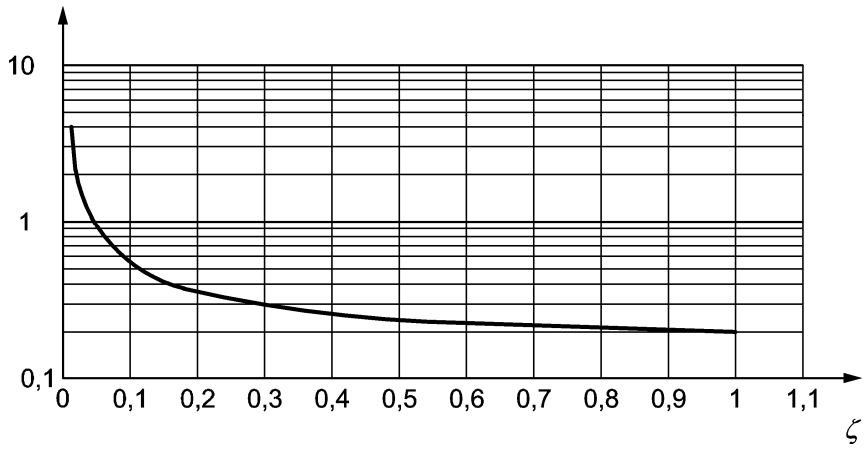

Figure A.1 — Uncertainty versus ζ (zeta)

It can be noticed that for ζ values above 0,1 the maximal uncertainty is about 0,6.

© NBN - Licentie alleengebruik: SA Euraqua Europe, 7202001429

Annex B
(informative)

Flow rate and physical phenomena of flow through a valve

B.1 General

When an uncompressible fluid flow passes through a valve, there is a relationship between flow, q_v and the differential pressure Δp. Figure B.1 illustrates this relationship.

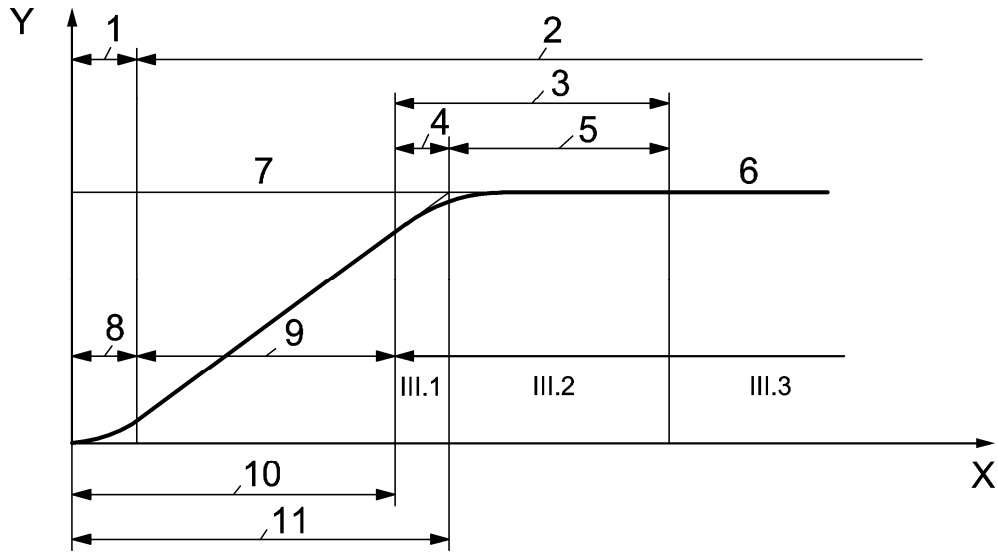

Key

X $\sqrt{\Delta P}$
Y Flow rate q_v
1 Laminar flow
2 Turbulent flow
3 With cavitation
4 Onset of cavitation
5 Total cavitation
6 With flashing ($P_2 < P_v$)
7 Normal flow
8 Zone I
9 Zone II
10 $\sqrt{\Delta P}$ onset of cavitation
11 $\sqrt{\Delta P}$ critical

Figure B.1 — Flow diagram versus square root of pressure drop

Figure B.1 illustrates the transition between normal flow conditions (laminar and turbulent flow rate) and vaporisation, cavitation and flashing (self-vaporisation) flow. These different phenomena are described below.

© NBN - Licentie alleengebruik: SA Euraqua Europe, 7202001429

B.2 Normal flow conditions

The two main classes of flow are laminar and turbulent flow.

In a laminar flow, all particles circulate in parallel, in a sequenced pattern and without fluid mixing.

Conversely, turbulent flow is a highly random flow in terms of direction and local velocity amplitude. The particular mean flow component is superimposed with instantaneous velocity components in all directions. A significant fluid mixture takes place within the flow.

However, as it is very often the case in many physical phenomena, there is no distinct limit between these two flow natures. Therefore, a third flow rating is sometimes referred to. The physical quantities which govern this flow rating are the viscosity and inertial forces and the ratio between them is referred to as the Reynolds Number. When viscosity forces are dominant (Reynolds number lower than 2 000) the flow is laminar or viscous. When inertial forces are dominant (Reynolds number more than 3 000) the flow is turbulent.

In a laminar flow, energy losses through pipes and valves are linearly proportional with mean flow rate or velocity. In a turbulent flow, these losses are proportional to the square of the rate or velocity. In a transient flow, these losses tend to be variable. Therefore, for equivalent flows, the differential pressure through a pipe or a restriction is different for each flow rating. To compensate this effect (the change in flow resistance) a correction factor shall be used when dimensioning valves.

This Reynolds factor is defined in compliance with EN 60534-2-1 and the flow coefficient for any type of flow can be determined based on the flow coefficient in turbulent conditions, according to Equation (B.1):

$$K_{v\ req} = F_R \times K_v \qquad \text{(B.1)}$$

Factor F_R is a function of the Reynolds number of the valve and can be determined from the diagram below, whenever the Reynolds number of the valve is known.

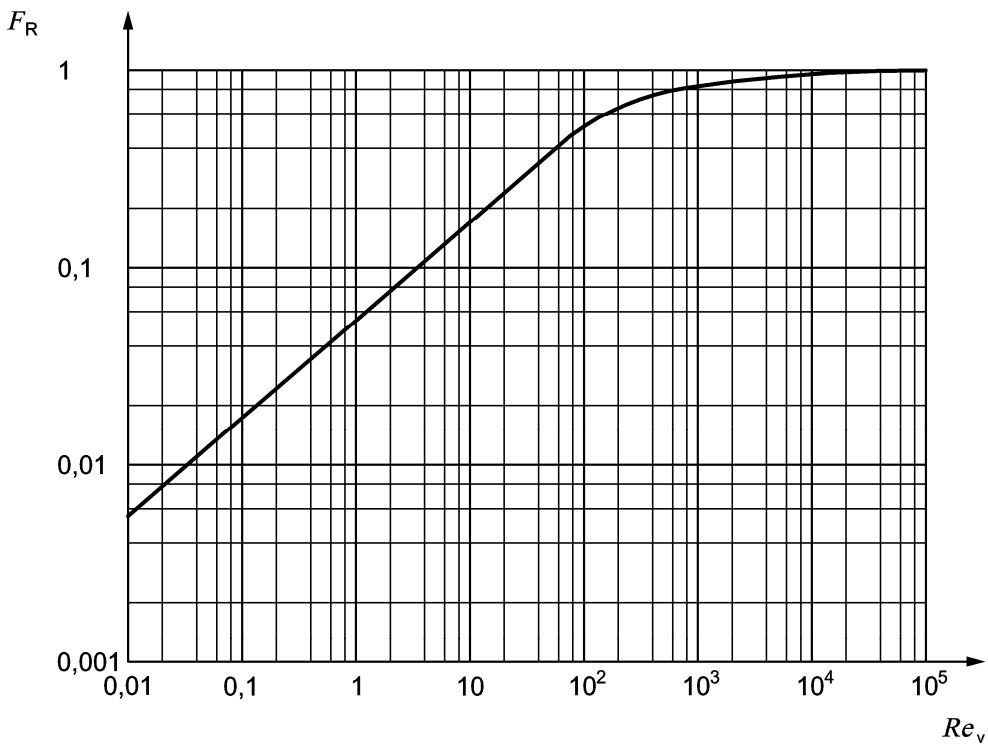

Figure B.2 — Factor F_R versus Reynolds number

© NBN - Licentie alleengebruik: SA Euraqua Europe, 7202001429

EN 60534-2-1 also indicates the relation for valve Reynolds number calculation.

Usually, when determining the flow coefficient in turbulent conditions, it is easier to refer to the Reynolds number of the test tube, defined in Equation (B.2):

$$Re = u \frac{D}{\nu} \tag{B.2}$$

where

u is the mean flow rate, in meters per second (m/s);

D is the inner diameter of the pipe, in millimetres (mm);

ν is the kinematics viscosity, in square meters per second (m^2/s).

To be sure that flow conditions are fully met, the tests are performed at flow corresponding to Reynolds numbers, in pipes, more than 4×10^4.

B.3 Cavitation

When the fluid passes through a surface area restriction, velocity increases up to a maximum value and the pressure loss to a minimum value. Then, downstream of the restriction, velocity is restored to its initial level whereas pressure is only partly restored, thereby creating a differential pressure through the device.

When differential pressure through a valve increases, flow also increases, rate (velocity) through the restriction increases and pressure at vena contracta decreases. Vena contracta is the smaller fluid passage section through the valve. If a high differential pressure is exercised on the valve for a given upstream pressure, the minimum pressure in the valve can decrease, or even be lower than the vapour tension of the fluid in these conditions; when this occurs, the fluid begins to vaporise itself partly. If the downstream pressure of the mixture, at exit, is larger than the vapour tension, the vapour phase is transformed into liquid phase again. The complete liquid-vapour-liquid phase change process is referred to as cavitation.

If the differential pressure is increased further, for the same upstream pressure value, the liquid fully vaporises at vena contracta and a maximum flow is established, referred to as critical flow.

During this phase change, a mechanical etching of the material surface occurs, due to micro-jets at high velocity and shock waves. With sufficient intensity, proximity and application time, this etching process may remove material down to the point when the valve can no longer maintain its functions and structural integrity. This vapour-liquid phase change is the main source of damage.

B.4 Flashing (self-vaporizations)

From total cavitation, if the differential pressure is further increased for the same upstream pressure, the pressure downstream of the valve is no longer restored to a value in excess of the vapour tension of the fluid, hence the fluid remains in vapour phase.

This phenomenon is referred to as flashing (self-vaporization). Flashing is highly erosive.

© NBN - Licentie alleengebruik: SA Euraqua Europe, 7202001429

Annex C
(informative)

Uncertainty on measurement

C.1 Introduction

Measurements are inevitably marred with uncertainty even though the measurement procedure and instrument, as well as the analysis methods, strictly meet the existing rules and, more specifically, the prescriptions of this European Standard.

Measurement uncertainty partly depends on residual uncertainty in the instruments or the measurement method. Once all known errors are cancelled by calibration and when dimension measurements are strictly recorded and the facility suitably prepared, etc., there remains an uncertainty which is never cancelled and cannot be reduced by measurement repetition, if the same instrument and the same measuring method are implemented. The evaluation of this uncertainty component based on the knowledge of the instrument used and the measurement methods is referred to as systematic uncertainty.

Another source of error due either to the measurement system properties or the measured quantity variations, or to both, directly appears in the form of measurement spread. The evaluation of this measurement uncertainty component is referred to as random uncertainty. Its evaluation requires the measurement and analysis (by statistic methods in cases) of the fluctuations and the stability of the measured physical quantities.

To reduce systematic uncertainty, the operators resort to more precise instruments or apply several measurement methods.

With the same instrument and measurement method, the uncertainty caused by random uncertainty can be reduced by increasing the number of measurements for the same physical quantity, in the same conditions.

When systematic and random uncertainty are determined, the total measurement uncertainty is calculated as the square root of the sum of the squares of the systematic and random uncertainty.

However, in this European Standard, if the recommendations pertaining to systematic uncertainty (in 4.5) and if all requirements imposed on the test procedure (as indicated in this European Standard) are applied, it can be assumed that total uncertainty does not exceed the values stated in 6.3.1.1 and 6.3.1.2.

C.2 Permissible measurement fluctuations

C.2.1 General

The examples below are based on the assumption that the physical quantities to be measured are not damped before their acquisition by the measurement systems.

C.2.2 Direct visual observation of signals delivered by the systems

If the measurement device does not include an electronic damper system, the signal values from the measurement device are subject to fluctuations during the time required for acquisition.

The user tries to visualise the maximum and minimum values reached by the signal.

© NBN - Licentie alleengebruik: SA Euraqua Europe, 7202001429

Generally, readings are considered as:

$$R = \frac{(Max. + Min.)}{2} \tag{C.1}$$

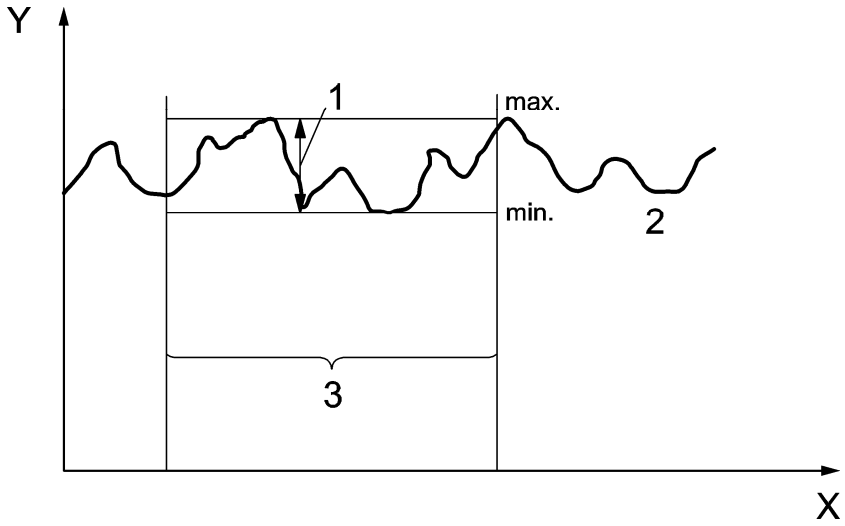

Key

X Time

Y Signal

1 Amplitude of fluctuations

2 Signal delivered by an instrument

3 Time for one reading by visual observation

Figure C.1 — Fluctuation amplitude

C.2.3 Automatic recording of signals delivered by measurement systems

When an automatic acquisition system is used, a number N of measurements is taken in a given time period. The number of measurements, N, the time period and the time between two measurements depend on the acquisition system properties and configuration.

© NBN - Licentie alleengebruik: SA Euraqua Europe, 7202001429

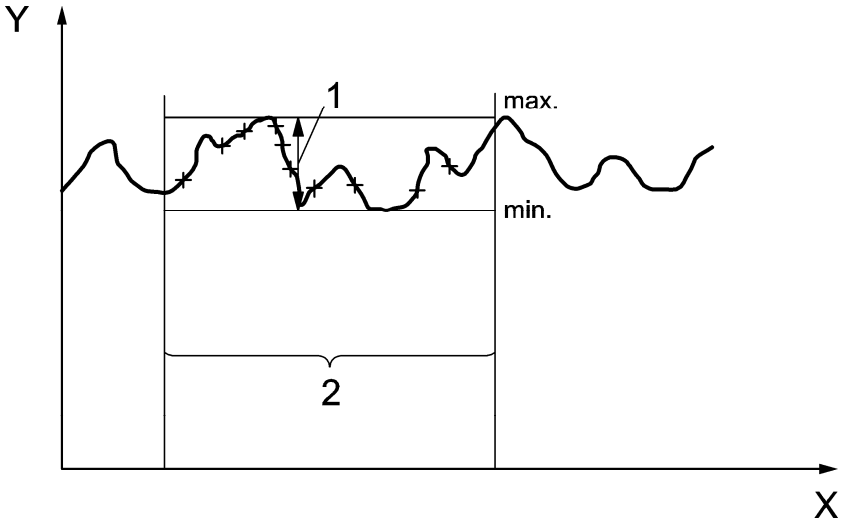

Key

X Time

Y Signal

1 Amplitude of fluctuations

2 Time for one set of measurement

\+ Values delivered by a data logging system

Figure C.2 — Fluctuation amplitude

In this case, the measurement is the arithmetic mean between N measurements:

$$R = (M_1 + M_2 + ... + M_N) / N \quad \text{(C.2)}$$

The maximum and minimum measurement values are taken from the N measurements:

$$Max = \text{Max}(M_1; M_2; ..; M_N) \quad \text{(C.3)}$$

$$Min = \text{Min}(M_1; M_2; ...; M_N) \quad \text{(C.4)}$$

The percentages, $(Max - R) / R$ and $(R - Min) / R$, shall be compared with the values in Tables 4, 5 and 6.

C.2.4 Automatic integration of signals delivered by the measurement systems

If the measurement system used includes an integration module which automatically ensures, with the required accuracy, the integration required for mean value calculation over an integration period longer than the corresponding system response time, the fluctuations on read values are generally much lower than those stated in 5.1.1 and 5.1.3.

© NBN - Licentie alleengebruik: SA Euraqua Europe, 7202001429

C.3 Measured value stability on physical quantities

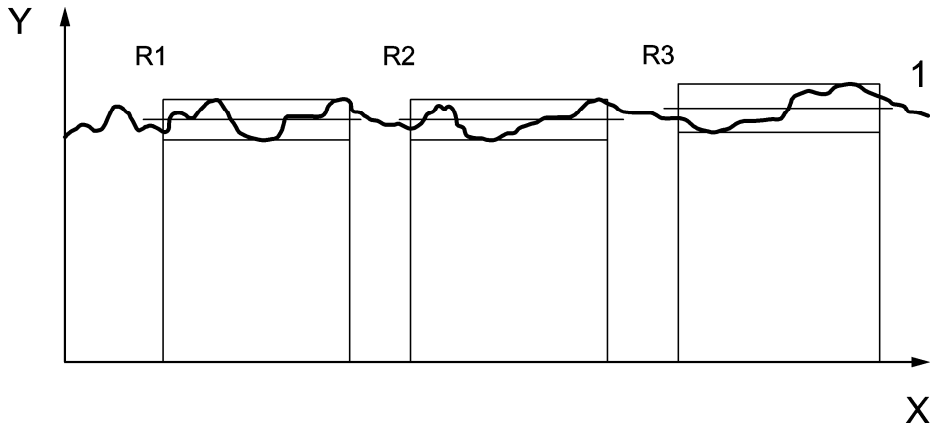

key

X Time

Y Signal

1 Signal delivered by an instrument

Figure C.3 — Reading a signal delivered by an instrument

The above diagram shows three series of readings on a signal. Values $R1$, $R2$, $R3$ are mean values determined as instructed in C.2.1 or C.2.2.

To verify whether the signal is stable, proceed as follows:

1) Calculate average:

$$A1 = (R1 + R2 + R3) / 3 \quad \text{(C.5)}$$

2) Determine the maximum and minimum readings (in this example: $Max = R3$ and $Min = R2$).

   — If $(R3 - A1) / A1$ and $(A1 - R2) / A1$ are lower than 1,8 %, the signal is considered as stable with respect to this European Standard.

   — If $(R3 - A1) / A1$ or $(A1 - R2) / A1$ is slightly higher than 1,8 %, carry out two additional acquisitions.

3) Calculate the average:

$$A2 = (R1 + R2 + R3 + R4 + R5) / 5 \quad \text{(C.6)}$$

4) Determine the maximum and minimum readings.

   — If $(Max - A2) / A2$ and $(A2 - Min) / A2$ are lower than 3,5 %, the signal is considered as stable with respect to this European Standard.

   — If $(Max - A2) / A2$ or $(A2 - Min) / A2$ is slightly higher than 3,5 %, carry out two additional acquisitions.

5) Repeat this procedure until reaching very close values to those stated in 5.1.3. However, if you reach 20 measurement series and if the permissible deviation between the highest and the lowest values read, versus the mean value, is higher than six, the process shall be stopped: the signal is not permanent.

© NBN - Licentie alleengebruik: SA Euraqua Europe, 7202001429

C.4 Determining flow rate and pressure loss coefficients in turbulent rating condition

For the test of a DN 50 valve, Table C.1 shows the mean value of the obtained measured quantities for three different points.

Table C.1 — Mean value of the measured quantities

Measurement point	Flow rate m^3/h	Upstream pressure	Differential pressure on valve and tube bar	Tube differential pressure bar	Valve differential pressure bar	Rate m/s	Re	K_V	ζ
1	41,44	5,150	0,254	0,042	0,212	5,86	2,93E + 05	90,0	1,235
2	36,36	5,556	0,194	0,032	0,162	5,15	2,58E + 05	90,3	1,222
3	28,99	5,679	0,122	0,021	0,101	4,10	2,05E + 05	91,2	1,202

In this example, the minimum value of the Reynolds number is five times the authorised value (4E + 04) required by this European Standard. This is justified by the fact that it is necessary to operate with a high enough differential pressure to obtain measurements with the required accuracy.

The arithmetic mean of K_V is:

$$(90{,}0 + 90{,}3 + 91{,}2\ ) / 3 = 90{,}5 \qquad \text{(C.7)}$$

The difference between maximum and minimum values of K_V, referred to the arithmetic mean and expressed in %, is:

$$[\ (91{,}2 - 90{,}0) \times 100\ ] / 90{,}5 = 1{,}32\ \% \qquad \text{(C.8)}$$

As the difference is lower than 4 %, the K_V factor of the valve in turbulent rating and without cavitation is considered as equal to 90,5.

© NBN - Licentie alleengebruik: SA Euraqua Europe, 7202001429

Annex D
(informative)

Evaluation of uncertainty of flow rate coefficient (K_v) and pressure losses coefficient (ζ)

D.1 Generality

The ISO Guide of the Uncertainty in Measurement (ISO/IEC Guide 98-3, also known as GUM) provides the international method to estimate the measurement uncertainty. There are different methods to estimate these measurement uncertainty, the strict mathematical way is described most extensively in the GUM, but the other methods which are in conformity with it can be used.

GUM groups uncertainty components into type A and type B according to the way these data were obtained. Type A components are calculated by statistical means from repeated measurements, while type B components are taken from other sources e.g. reference material, calibration certificates, accepted values of constants, resolution, instability, environmental conditions.

A combined approach will be the most suitable; this combined approach is applied very often, as it is impossible to estimate each uncertainty individually. Here, the type B is used with reference sensors and quality control sensors to avoid some systematic measuring uncertainties.

Type A uncertainty is an estimation issued from the statistical analysis of experimental data. This type of uncertainty evaluation is preferably used when the value of a measurand is the average of several test results or is in relation with non independent variables.

D.2 Evaluation of measurement uncertainty of the K_v (C_v)

D.2.1 Determination of flow rate coefficient

According to this European Standard, the flow rate characteristic parameter of a valve is the flow coefficient, K_v. The equation, the quantity subject to measurement and input quantities are the following.

$$K_V = Q_V \sqrt{\frac{\rho}{\rho_0 \Delta P}} \tag{D.1}$$

where

Q_V is the flow rate, in cubic meter per hour (m^3/h);

ρ the density of test fluid (water), in kilogram per cubic meter (kg/m^3);

ρ_0 the density of test fluid (water) at 15 °C, in kilogram per cubic meter (kg/m^3);

ΔP is the pressure loss in the valve, in bar.

© NBN - Licentie alleengebruik: SA Euraqua Europe, 7202001429

D.2.2 Identification of uncertainty of input quantities

According to Equation (D.1), the input quantities subject to measurement are the following.

— Q_V flow rate.

  Uncertainty following accuracy of measuring instrument: the maximum values of e_q are given in Table 9.

  For some technologies in flow rate measurement devices, additional uncertainty can appear, sometimes the value of flow measurement depends on upstream pressure. This kind of deviation shall be evaluated and added to the previous e_q. For this reason, the flow meter is preferably located before the upstream measuring tube, because this part is not subject to significant pressure variations.

— ΔP upstream stagnation pressure.

  Uncertainty following accuracy of pressure measurement devices: the maximum values of $e_{\Delta P}$ are given in Table 8.

These input quantities are independent variables and the sensitivity can be calculated.

D.2.3 Sensitivity coefficient

Sensitivity coefficients are obtained from partial derivatives of Equation (D.1) with respect to the input parameters

$$dK_V = \frac{\partial K_V}{\partial Q_V} dQ_V + \frac{\partial K_V}{\partial \Delta P} d\Delta P + \frac{\partial K_V}{\partial \rho} d\rho + \frac{\partial K_V}{\partial \rho_0} d\rho_0 \tag{D.2}$$

The sensitivity coefficient a_{QV} are given by:

$$a_{Q_V} = \frac{\partial K_V}{\partial Q_V}\left[\frac{Q_V}{K_V}\right] = 1 \tag{D.3}$$

The sensitivity coefficient $a_{\Delta P}$ are given by:

$$a_{\Delta P} = \frac{\partial K_V}{\partial \Delta P}\left[\frac{\Delta P}{K_V}\right] = -\frac{1}{2} \tag{D.4}$$

The sensitivity coefficient a_ρ are given by:

$$a_\rho = \frac{\partial K_V}{\partial \rho}\left[\frac{\rho}{K_V}\right] = \frac{1}{2} \tag{D.5}$$

The sensitivity coefficient $a_{\rho 0}$ are given by:

$$a_{\rho_0} = \frac{\partial K_V}{\partial \rho_0}\left[\frac{\rho_0}{K_V}\right] = -\frac{1}{2} \tag{D.6}$$

© NBN - Licentie alleengebruik: SA Euraqua Europe, 7202001429

D.2.4 Type A evaluation uncertainty

An estimation of the mean value of the coefficient K_v is obtained by the average of several measurement points, such as:

$$\overline{K}_V = \frac{1}{n}\sum_i K_{Vi} \tag{D.7}$$

where

n is the number of measurement points;

K_{Vi} is the measurement result of data at i.

The experimental standard deviation σ_{KV} characterizes the variability of observed values K_{vi} during the measurement period:

$$\sigma_{K_V} = \sqrt{\frac{\sum_i \left(K_{Vi} - \overline{K}_V\right)^2}{n-1}} \quad (n > 1) \tag{D.8}$$

D.2.5 Expression of relative uncertainty

Table D.1 summarizes the coefficients to be applied in the uncertainty calculation.

Table D.1 — Coefficients for uncertainty calculation

Origin of the uncertainty	Relative uncertainty	Probability distribution		Standard uncertainty	Sensitivity coefficient	Contribution to global uncertainty
	$U(x)$	type	divisor	$u(x) = \frac{U(x)}{d}$	a_i	$[a_i \cdot u(x_i)]^2$
Repeatability of the measurement	-----	-----	-----	$\frac{\sigma_{K_V}}{K_v}$	1	$\left(\frac{\sigma_{K_V}}{K_v}\right)^2$
Pressure measurement	$U(\Delta P)$	normal	2	$u(DP)$	0,5	0,25 $u^2(\Delta P)$
Flow rate measurement	$U(Q_v)$	normal	2	$u(Q_V)$	1	$u^2(Q_v)$
Density measurement	$U(\rho)$	rectangular	1,73	$u(\rho)$	0,5	0,25 $u^2(\rho)$
Density at 15 °C	$U(\rho_0)$	rectangular	1,73	$u(\rho_0)$	0,5	0,25 $u^2(\rho_0)$

The expanded uncertainty on the K_v coefficient is determined by Equation (D.9):

$$U(K_V) = 2\sqrt{\sum (a_i u(x_i))^2} \tag{D.9}$$

© NBN - Licentie alleengebruik: SA Euraqua Europe, 7202001429

The relative expanded uncertainty for the flow rate coefficient is then given by:

$$\frac{\Delta K_V}{K_V} = 2\sqrt{\left(\frac{a_{Q_V}}{2}\frac{\Delta Q_V}{Q_V}\right)^2 + \left(\frac{a_{\Delta P}}{2}\frac{\Delta\Delta P}{\Delta P}\right)^2 + \left(\frac{a_\rho}{1{,}73}\frac{\Delta\rho}{\rho}\right)^2 + \left(\frac{a_{\rho_0}}{1{,}73}\frac{\Delta\rho_0}{\rho_0}\right)^2 + \left(\frac{\sigma_{K_V}}{K_v}\right)^2} \quad \text{(D.10)}$$

D.3 Evaluation of measurement uncertainty of the ζ

D.3.1 Determination of flow resistance coefficient

According to this European Standard the coefficient of a valve ζ is determined by Equation (D.11). The quantity subject to measurement and input quantities are the following.

$$\zeta = \frac{2\Delta P_v}{\rho u^2} \quad \text{(D.11)}$$

where

u is the mean water velocity, in meter per second (m/s);

ρ is the density of test fluid (water), in kilogram per cubic meter (kg/m^3);

ΔP_v is the pressure loss in the valve, in Pascal (Pa).

D.3.2 Identification of uncertainty of input quantities

According to Equation (D.11) the input quantities subject to measurement are:

— q flow rate.

Uncertainty following accuracy of measuring instrument: the maximum values of e_q are given in Table 9.

For some technologies in flow rate measurement devices, additional uncertainty can appear, sometimes the value of flow measurement depends on upstream pressure. This kind of deviation shall be evaluated and added to the previous e_q. For this reason, the flow meter is preferably located before the upstream measuring tube, because this part is not subject to significant pressure variations.

— ΔP_v upstream stagnation pressure.

Uncertainty following accuracy of pressure measurement devices: the maximum values of $e_{\Delta P}$ are given in Table 8.

These input quantities are independent variables and the sensitivity can be calculated.

D.3.3 Sensitivity coefficient

Sensitivity coefficients are obtained from partial derivatives of the previous Equation (D.11) with respect to the input parameters

$$d\zeta = \frac{\partial\zeta}{\partial\Delta P}d\Delta P + \frac{\partial\zeta}{\partial\rho}d\rho + \frac{\partial\zeta}{\partial u}du \quad \text{(D.12)}$$

© NBN - Licentie alleengebruik: SA Euraqua Europe, 7202001429

The sensitivity coefficient $a_{\Delta P}$ are given by:

$$a_{\Delta P} = \frac{\partial \zeta}{\partial \Delta P}\left[\frac{\Delta P}{\zeta}\right] = 1 \tag{D.13}$$

The sensitivity coefficient a_{ρ} are given by:

$$a_{\rho} = \frac{\partial \zeta}{\partial \rho}\left[\frac{\rho}{\zeta}\right] = -1 \tag{D.14}$$

The sensitivity coefficient $a_{\rho 0}$ are given by:

$$a_{u} = \frac{\partial \zeta}{\partial u}\left[\frac{u}{\zeta}\right] = -2 \tag{D.15}$$

Concerning the uncertainty of the velocity a calculation based on the following equation can be applied.

The mean velocity is given by the following relation:

$$u = \frac{q \times 10^{6}}{\left(\frac{\pi D^{2}}{4}\right)} \tag{D.16}$$

where

q is the flow rate, in cubic meter per second (m^3/s);

D is the inner diameter of the test tube, in millimetre (mm).

In this case, the sensitivity coefficient is given by:

$$a_{q} = \frac{\partial u}{\partial q}\left[\frac{q}{u}\right] = 1 \tag{D.17}$$

and

$$a_{D} = \frac{\partial u}{\partial D}\left[\frac{D}{u}\right] = -2 \tag{D.18}$$

So the uncertainty on the velocity measurement can be calculated as follows:

$$\frac{\Delta u}{u} = \sqrt{\left(\frac{a_q}{2}\frac{\Delta q}{q}\right)^{2} + \left(\frac{a_D}{m}\frac{\Delta D}{D}\right)^{2}} \tag{D.19}$$

where m = 2 if the diameter is measured or 1,73 if the diameter is given by the manufacturer.

© NBN - Licentie alleengebruik: SA Euraqua Europe, 7202001429

D.3.4 Type A evaluation uncertainty

An estimation of the mean value of the coefficient ζ is obtained by the average of several measurement points, such as:

$$\overline{\zeta} = \frac{1}{n}\sum_i \zeta_i \tag{D.20}$$

where

n is the number of measurement points;

ζ_i is the measurement result of data at i.

The experimental standard deviation σ_ζ characterizes the variability of observed values ζ_i during the measurement period:

$$\sigma_\zeta = \sqrt{\frac{\sum_i \left(\zeta_i - \overline{\zeta}\right)^2}{n-1}} \quad (n > 1) \tag{D.21}$$

D.4 Expression of relative uncertainty on ζ

The relative expanded uncertainty for flow resistance coefficient is then given by Equation (D.22).

$$\frac{\Delta\zeta}{\zeta} = 2\sqrt{\left(\frac{a_{\Delta P}}{2}\frac{\Delta\Delta P}{\Delta P}\right)^2 + \left(\frac{a_u}{2}\frac{\Delta u}{u}\right)^2 + \left(\frac{a_\rho}{1{,}73}\frac{\Delta\rho}{\rho}\right)^2 + \left(\frac{\sigma_\zeta}{\zeta}\right)^2} \tag{D.22}$$

© NBN - Licentie alleengebruik: SA Euraqua Europe, 7202001429

Bibliography

EN 60534-2-1, *Industrial-process control valves — Part 2-1: Flow capacity — Sizing equations for fluid flow under installed conditions (IEC 60534-2-1:2011)*

EN 60534-2-3, *Industrial-process control valves — Part 2-3: Flow capacity — Test procedures (IEC 60534-2-3:1997)*

EN ISO 1127, *Stainless steel tubes — Dimensions, tolerances and conventional masses per unit length (ISO 1127:1992)*

ISO 65, *Carbon steel tubes suitable for screwing in accordance with ISO 7-1*

ISO 4200, *Plain end steel tubes, welded and seamless — General tables of dimensions and masses per unit length*

ISO 6358, *Pneumatic fluid power — Components using compressible fluids — Determination of flow-rate characteristics*

ISO 7598, *Stainless steel tubes suitable for screwing in accordance with ISO 7-1*

ISO/IEC Guide 98-3, *Uncertainty of measurement — Part 3: Guide to the expression of uncertainty in measurement (GUM:1995)*