Water Specialist 2.0” Plastic No Hard Water Bypass Valve

Certified to NSF/ANSI/CAN 61 and NSF/ANSI/CAN 372.

Order No. V3037

- Fiber Reinforced Composite Material
- Allows for outlet shutoff and isolation
- Full assortment of WS2P fitting kits available
- Hydraulically balanced piston valve
- Provides no raw untreaded water bypass during a regeneration
- Proven and reliable Clack DC drive assembly
- Low voltage drive controlled by valve’s circuit board
- Flow from inlet to outlet 125 gpm at 3.5 psi drop (Cv 67.2)
- Operating Pressures: 20 psi (1.38 bar) Minimum 125 psi (8.6 bar) Maximum
- Operating Temperatures: 40°F (4.4°C) Minimum 110°F (43.3°) Maximum

WS2P Elbow
QC x QC
Order No. V4460-06

WS2P Elbow QC x NPT or BSPT
Order No. V4460-04 or V4460-05

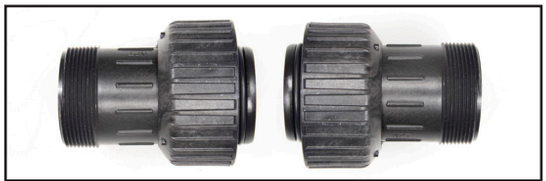

WS2P Fitting Assembly QC to NPT or BSPT
Order No. V4460-01 or V4460-02

WS2P Fitting Assembly QC to QC
Order No. V4460-03

Order No. V3037 • Description: WS2 PLASTIC NHWBY ASSY

Drawing No.	Order No.	Description	Quantity
1	V4479	WS2 PLASTIC NHWBY BODY ASSY	1
2	V3077	WS2 MAV STACK ASSEMBLY	1
3	V3634-01	WS2 MAV, STRAIGHT PISTON, COATED	1
4	V3078	WS2 MAV/NHWBP DRIVE CAP ASSY	1
5	V3642	1/4-20 x 1.25 BHCS	4
6	V3264	WS2 BYPASS REDUCTION GEAR AXEL	3
7	V3110	WS1 DRIVE GEAR 12X36 PLAIN	1
8	V3262	WS AUX VALVE REDUCTION GEAR COVER	1
9	V3592	#8 X 3/4, PHPN T-25, SS	3
10	V3476	WS DRIVE MOTOR, FERRITE CORE HARNESS, 96”	1
11	V3073	DRIVE COVER ASSEMBLY	1
*12	V3043	WS2 MAV & NHWB SERVICE PACK	1

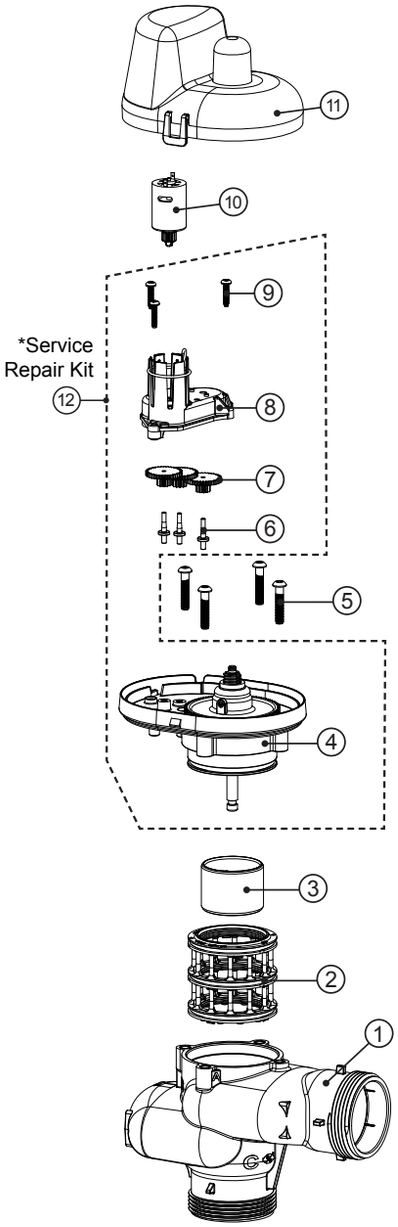

•Operating Pressures:
20 PSI Minimum / 125 PSI Maximum
•Operating Temperatures:
40°F Minimum / 110°F Maximum

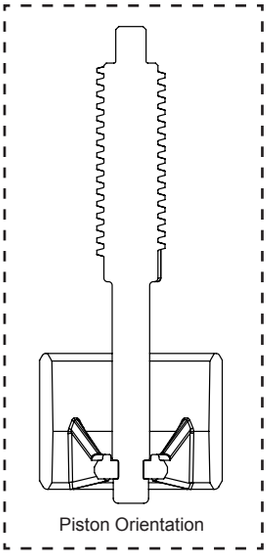

Clack Corporation
www.clackcorp.com
4462 DURAFORM LANE • WINDSOR, WISCONSIN 53598-9716 USA
PHONE (608) 846-3010 FAX (608) 846-2586 SALES/CUSTOMER SERVICE FAX (800) 755-3010

Form No. 3256 • 9/28/2021