Instruction manual

Installation / Use / Maintenance

DEVICE

LIQUID SINGLE
V1.0

1 System information

This instruction manual only applies to the device supplied. The device is unambiguously identified via the serial number.

2 Structure of the manual

This manual for your UV-C system is made up of two parts, see below for descriptions of each part.

Type	Description
SERIES	Specifications and spare parts per type of product.
DEVICE	For installing, using, operating and maintaining the device.

All manual parts are provided with a new product to ensure that all aspects are guaranteed. Should it appear that one of the above items is missing, please contact your supplier immediately.

3 Warning

UV-C light damages your skin and the retina of your eyes, therefore avoid direct and indirect radiation.

If the UV-C lamp hours have expired, the disinfection of the device is no longer guaranteed!

4 Device parameters

The device has a number of parameters that are important to establish before raising queries regarding the product. Make sure that these parameters are known before contacting your supplier.

Please note, the serial number is also important.

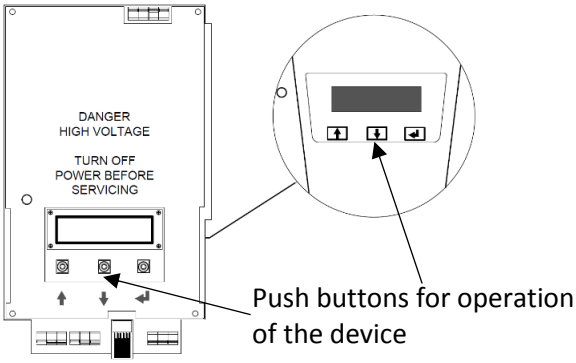

1. Scroll **UP** button to display the following text display;

Lamp power installed Device software status	LAMP - - -W LL **VERSION -.- -**

2. Use the **ENTER** button to view the following parameters;

LAMP - - -W LL **OPTION V1.- -** Option board installed and software state	LAMP - - -W LL **OPTION NOT FOUN** Option board not installed
LAMP - - -W LL **M: UV T PD IT FT** Active modules device (see right for legend)	**UV** = UV sensor **T** = Thermocouple **PD** = Powerdip protection **IT** = Internal temp. protection **FT** = Hardware current protection
LAMP - - -W LL **TSD (DUMPVALVE)** Waste valve activated	LAMP - - -W LL **TSS (LAMP OFF)** Temperature safety activated
LAMP - - -W LL **HARDWARE - - -.-** Hardware version of the control PCA	
LAMP 325W LL **Relay PCA found** Add-On relay device installed *From software version V3.06.*	LAMP 325W LL **No Relay PCA** Add-On relay not found by control PCA

Table of contents

1 System information 2
2 Structure of the manual 3
3 Warning 3
4 Device parameters 4
5 Table of contents 5
6 Glossary 7
7 Device requirements 8
7.1 Requirements for the installer 8
7.2 Requirements for the environment 8
7.3 Requirements for electrical installation 8
8 Safety measures & regulations 9
9 Environment & Scrapping 10
10 Logbook 10
11 Optional UV sensor 11
12 Optional Temperature protection 11
13 Control unit 12
13.1 Dimensions 14
13.2 Mounting 14
13.3 Installation 15
13.3.1 Alarm contacts 15
13.4 Use 15
13.5 Maintenance 15
13.6 Failure 15
14 Reactor chamber 16
14.1 Installation 17
14.1.1 Pressure test 17
14.1.2 Waste valve 18
14.2 Use 18
14.3 Maintenance 18
14.3.1 Cleaning 18
15 Commissioning 19
15.1 Start-up device 19
15.1.1 Start-up phase control PCA 19
15.2 Operation 19
16 UV-C lamp 20
16.1 Lamp connector 20
16.2 Disassembly 21
16.3 Installation 22

16.4 Resetting UV-C lamp hours ... 23
16.4.1 Control PCA ... 23
16.4.2 UV monitor ... 23
17 Quartz sleeve ... 24
17.1 Disassembly ... 24
17.2 Installation ... 25
18 UV sensor ... 27
18.1 Type of UV sensor ... 27
18.2 UV sensor cable ... 28
18.3 Disassembly ... 28
18.4 Installation ... 29
18.5 Set point UV sensor ... 29
18.5.1 Determining the PCA set point control ... 30
18.5.2 Determining the set point UV monitor ... 30
19 Flow management system ... 30
19.1 Disassembly ... 30
19.2 Installation ... 32
20 Control PCA ... 34
20.1 Dimensions ... 35
20.2 Electrical connection ... 36
20.3 Features ... 37
20.3.1 Operation ... 37
20.3.2 Basic menu ... 38
20.3.3 Operation status ... 39
20.3.4 Menu language ... 39
20.3.5 Alarm settings ... 40
20.3.6 Device status ... 41
20.4 Maintenance ... 43
20.4.1 Overriding lamp hours ... 43
21 Option Board ... 44
21.1 Dimensions ... 44
21.2 Electrical connections ... 45
22 Troubleshooting ... 46

6 Glossary

Add-on relay	A printed circuit board applied to the control PCA for optimizing the UV-C lamp control. This component is supported from software version V3.06.
MOD1001	Represents a modification, which means that the system is equipped with an add-on relay.
Flow	Is a physical quantity for a through-flowing medium, expressed as the quantity of a liquid per unit of time.
Dose	The dose concerns the radiation intensity generated by the UV-C lamps compared with the residence time of the product. Dose has the unit of measure J/m2.
FMS	The abbreviation FMS stands for flow management system. If the system is equipped with a flow plate, it ensures that the flow is optimized to ensure efficient disinfection.

7 Device requirements

In order to successfully install the device, requirements are imposed on the installer and the environment. Installation of the control unit and reactor chamber is detailed in the respective sections of this manual. See the table of contents of this document.

7.1 Requirements for the installer

The device, any software and components must be installed by an authorized person. This competent person must meet the following requirements:

- Be familiar with this device, which means that a training has been followed at the supplying agency, or by some other means practical knowledge has been gained with the device.
- Sufficient general knowledge of installation technology for electrical and water-side installation.

7.2 Requirements for the environment

When installing the device, the following aspects should be taken into account;

- The IP value of the device is in accordance with the environment.
- The ambient temperature meets the specification issued by the manufacturer.
- The air humidity meets the specification issued by the manufacturer.
- The device must not be exposed to direct sunlight.
- The device must not be exposed to salts and/or acids.
- The space around the device must be provided with sufficient light for the operation and maintenance thereof.
- Allow sufficient space around the device for operation and maintenance.
  Take a full length of the reactor chamber as free space for replacing the UV-C lamp.

7.3 Requirements for electrical installation

When installing the device electrically, the following aspects must be observed;

- Very frequent switching of the UV-C lamp ensures that the lifespan is reduced. As a rule of thumb, take a cooling time of 5 minutes after turning off the UV-C lamp.
- The UV-C lamp needs about 2 minutes to generate the maximum UV-C output.
  In the case of a UV-C FLX lamp, this time is about 5 minutes.
- Provide a stable power source according to specification. Use an earth leakage breaker according to specification.
- Apply a safety ground for both the control unit and the reactor room.
- Use the alarm contacts if there is no direct view of the device.

8 Safety measures & regulations

Read and follow the basic instructions and warnings that are specified in this manual. There are three types of warnings, classified according to the severity of the hazard. The symbols and signal words used are explained in the following table;

Symbol / signal word	Description
DANGER	Marks aspects that can lead to serious injuries or death if ignored or incorrectly used.
WARNING	Marks aspects that can result in serious injuries if ignored or used incorrectly.
CAUTION	Marks aspects that result in injuries or damage if ignored or used incorrectly.

In addition, there are a number of symbols that complement the symbol with a signal word. See the explanation of these symbols below;

SYMBOL	Explanation
	Wearing safety goggles is mandatory. The safety glasses must comply with the marking 2C-1.2 (EN 170:2002)
	Wearing a safety face cap is mandatory. The safety face cap must comply with the marking 2C-1.2 (EN 170:2002)
	Wear of protective clothing is mandatory.
	Wearing gloves.
	Electricity / electric voltage.
	Warm / hot surface.
	Electrostatically sensitive component.
	UV-C radiation.

9 Environment & Scrapping

The UV disinfection system consists of several parts, please observe local and international legislation for disposal of this device.

The following components must be disposed of separately:

- Quartz sleeve
- UV-C Lamp
- Control unit

When decommissioning the UV disinfection device, it is necessary to work in the following manner:

- Check that the electricity is switched off and that the liquid supply is switched off / blocked;
- Disconnect the electricity and remove the cables;
- Drain the device and the pipes and collect the contents. If necessary, dispose of the collected liquid in a responsible manner;
- Disconnect the pipes;
- Disassemble the installation.

10 Logbook

It is advisable to record malfunctions and maintenance related activities. This can vary from replacing a UV-C lamp to eliminating a leak.

It is important that failures, incidents and-or maintenance is recorded centrally. The warranty conditions apply to the device, as described in the Metaalunie conditions of 2014, article 14: Warranty and other claims.

After installation
Register the date of commissioning, the location data, the serial number and the type of device.

Standard recording
After each activity, record the date on which this took place. In addition, it is important to note the system and lamp hours as well as the number of system and lamp starters. Finally, note which parts have been replaced per date.

11 Optional UV sensor

By using a UV sensor, it becomes possible to measure the light output of the UV-C lamp on the reactor wall. The starting point of this sensor is not measuring the UV-C dose, but changing the radiation intensity on the wall of the reactor, which serves as an indication for aging of the UV-C lamp, pollution and changing transmission.

Default setting	: Pre-alarm	≤ 70% intensity.
	: Main alarm	≤ 50% intensity.

The above settings are adjustable.

12 Optional Temperature protection

By applying a temperature protection, it is possible to protect the UV-C lamp against overheating. There are two types of protection, a temperature sensor (+ TSS), or a combination of a temperature sensor with a flush valve (+ TSD).

+TSS

The temperature is measured indirectly by a thermocouple mounted on the outside of the reactor chamber. If the measured temperature is above the pre-alarm value, only a message will be generated. As soon as the main alarm value is exceeded, the UV-C lamp will be switched off preventively.

Default setting	: Pre-alarm	≥ 30 degrees
	: Main alarm	≥ 35 degrees

The above settings are adjustable.

+TSD

The temperature is indirectly measured by a thermocouple, just like the + TSS version. The difference is that this version is combined with a waste valve. As soon as the measured temperature rises above the pre-alarm value, the waste valve is activated. This creates water-side demand, allowing the UV-C lamp to cool down. If this is not sufficient, the UV-C lamp will be switched off by software if the main alarm value is exceeded. The waste valve also remains active until the temperature is below the pre-alarm value again.

Default setting	: Pre-alarm	≥ 35 degrees
	: Main alarm	≥ 50 degrees
	: Flush time	10 seconds
	: Waiting time	30 seconds

The above settings are adjustable.

13 Control unit

The control unit is part of the device. The control unit is specifically designed for controlling multiple UV-C lamps. See the explanation of the different parts below;

Standard version

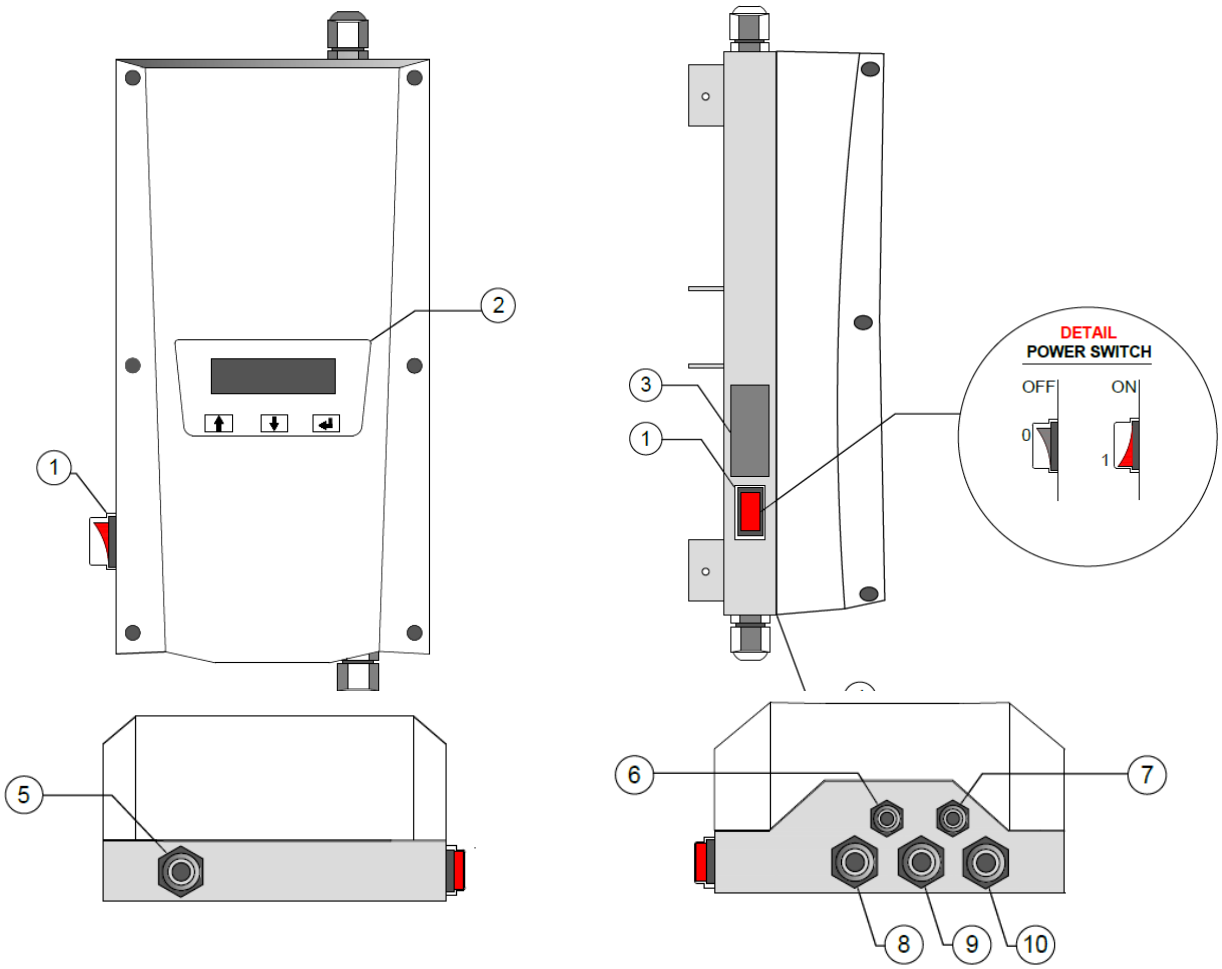

Item	View	Function
1	Front	Main switch for switching on and off 230VAC
2		Human interface
3	Left side	Serial number sticker
4		Sealing
5	Top	Cable gland M16 lamp cable
6	Bottom	Cable gland M12 UV sensor cable or blind stop
7		Cable gland M12 Temperature sensor of blind stop
8		Cable gland M16 Waste valve or blind stop
9		Cable gland M16 or blind stop
10		Cable gland M16 mains cable 230VAC

Stainless steel version - optional

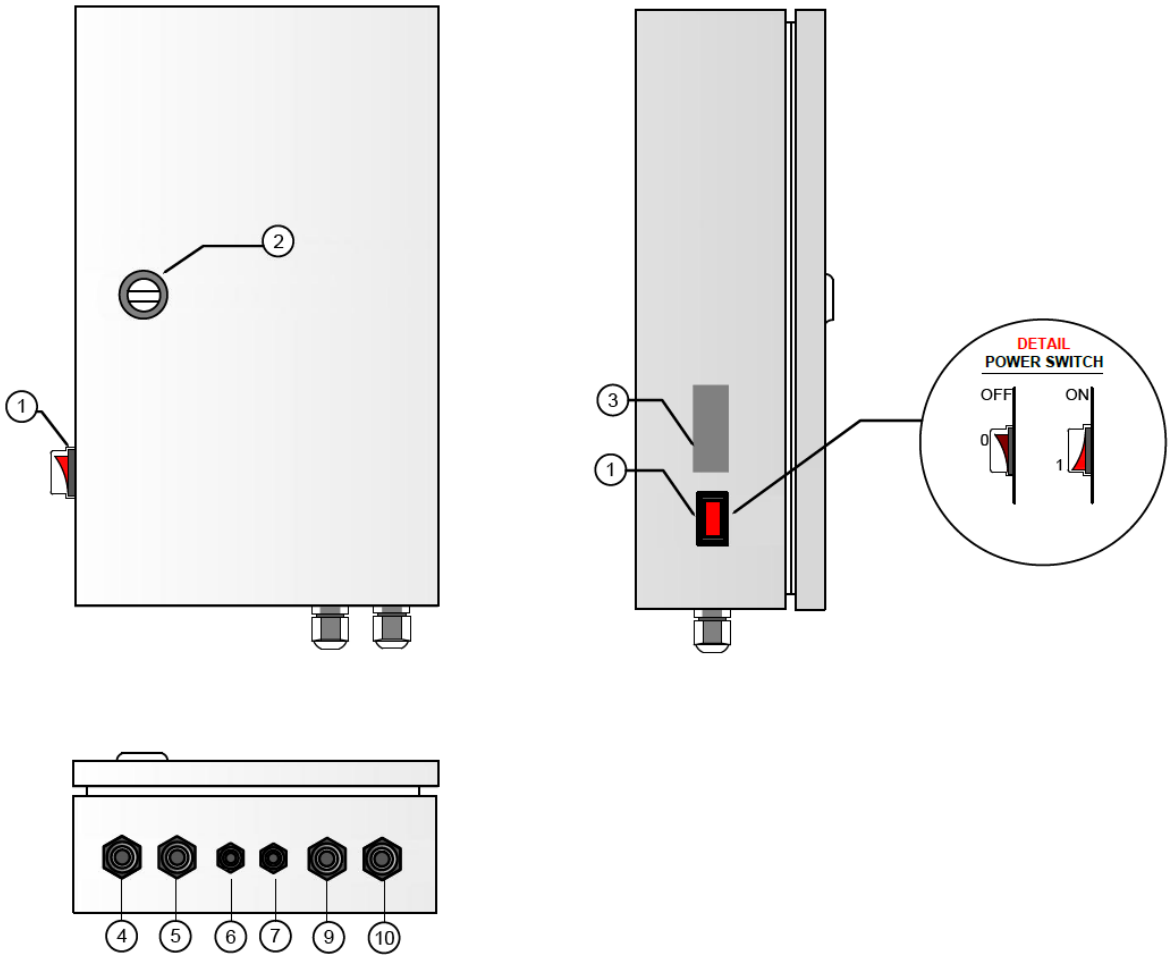

Item	View	Function
1	Front	Main switch for switching on and off 230VAC
2		Doorlock
3	Left side	Serial number sticker
4	Bottom	Cable gland M16 Waste valve or blind stop
5		Cable gland M16 or blind stop
6		Cable gland M12 Temperature sensor of blind stop
7		Cable gland M12 UV sensor cable or blind stop
8		Cable gland M16 Waste valve or blind stop
9		Cable gland M16 mains cable 230VAC
10		Cable gland M16 lamp cable

13.1 Dimensions

Standard version

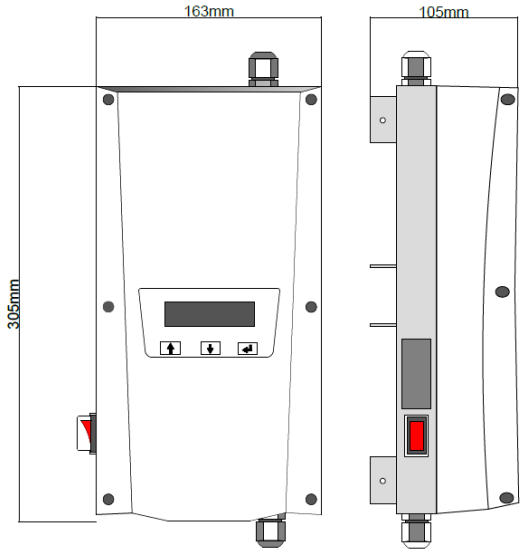

Stainless steel version - optional

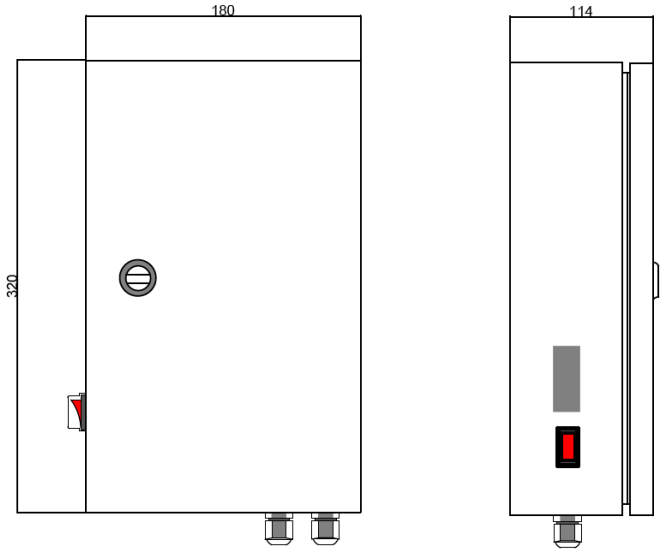

13.2 Mounting

The control unit must be mounted within the range of the cable length.
The unit must be installed by a qualified installer.

It is a possibility to mount the unit on a surface with the available mounting points.

Standard version

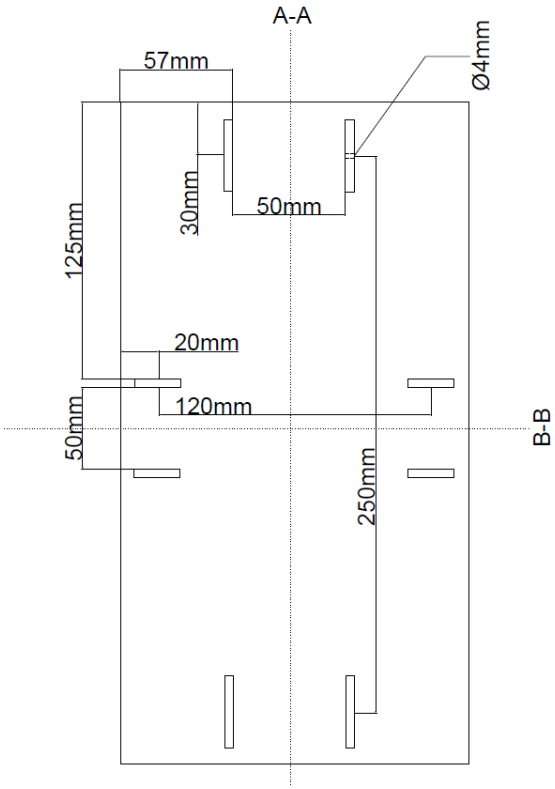

Stainless steel version - optional

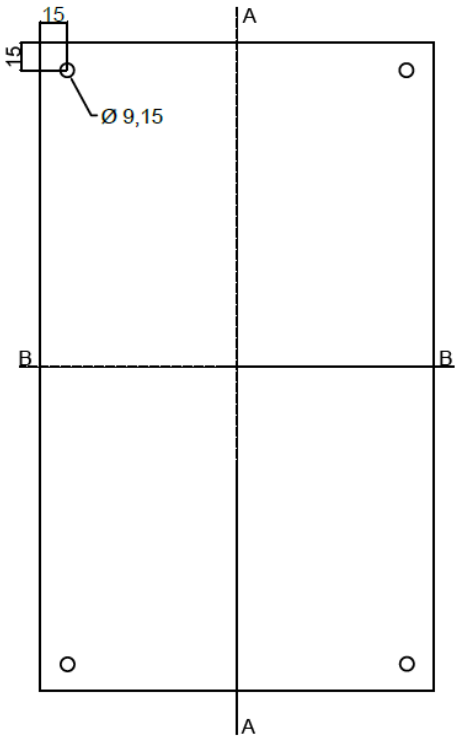

13.3 Installation

WARNING

- Observe the device requirements for installation.
- Electrically use an earth leakage circuit breaker to secure the device and ensure safety. See the technical specifications for more information about the properties.

1. Attach the control unit to a suitable surface if it's not attached to the reactor, and take into account the maximum cable length of the UV-C lamps related to the distance to the reactor chamber.
2. Connect the control unit electrically, see the electrical connection section.
3. Provide a safety grounding.
   Check optically that all cables and components are correctly installed and that there are no damages. This is because of the safety and operation of the device.

13.3.1 Alarm contacts

Potential free change-over contacts are used on the control PCA.

Pre-alarm : Warning, no consequences for the degree of disinfection.
Main alarm : Failure status, but consequences for the degree of disinfection.

See the sections Control PCA and UV monitor for the alarm settings that affect, among other things, the activation of these alarms.

13.4 Use

When the device is installed according to safety standards and instructions, the device can be put into operation. See section Commissioning.
The device is equipped with multiple control PCAs. With this component the device can be operated and adjusted.

13.5 Maintenance

The UV-C lamp cable is the only part used within the control unit, which has a replacement term. In addition, electrical components have been used that can become defective.

If it is not clear how to replace these components, consult your supplier for more information.

13.6 Failure

The device uses software and electronics that respond to various situations. For this reason, it is advisable to check before repair or replacement, what causes the malfunction. Before contacting your supplier, make sure that the device parameters are known.

For more information, see the section Troubleshooting.

14 Reactor chamber

The reactor chamber forms a basic part of the UV-C disinfection device. The reactor chamber is designed to disinfect liquid. Thanks to the axial design in combination with the unique flow plate, effective disinfection is ensured.

The dimensions, diameter and design of the reactor chamber depend on the type of device.
See below an illustration of the reactor chamber.

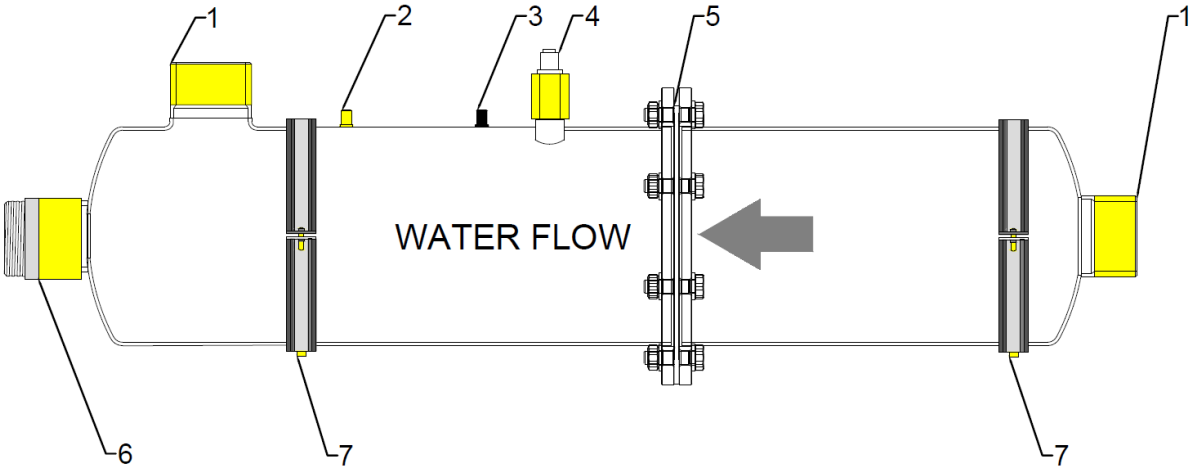

Item	Part	Description
1	Connection	For the installation of the reactor water side. See the specifications for the connection size.
2	M6 pin	For the application of a safety grounding
3	M6 pin	For the fixation of a thermocouple in order to protect the UV-C light at too high a temperature.
4	UV sensor	Is optional and for making the light output visible on the wall of the reactor.
5	Flow plate	Ensures the flow in the reactor that ensures optimal disinfection. In addition, this part serves as quartz sleeve holder.
6	Reactor coupling	The reactor coupling forms a set with the pressure sleeve and o-ring to seal the quartz sleeve.
7	Mounting bracket	For fixation of the reactor chamber.

14.1 Installation

Within this chapter, the installation of the reactor chamber is described step by step.

WARNING

- Observe the device requirements for installation.
- Install devices with a UV-C lamp power higher than 120W only horizontally.
- It is advisable to use a bypass, so that the reactor chamber can be isolated for maintenance purposes within the pipe circuit.
- Take care of a drain and aeration point within the pipe circuit if the reactor room does not have this option.
- Prevent vibrations in the circuit, in order to prevent damage and water hammer.

It is advisable to install the reactor room without UV-C lamp(s).
For the (dis)assembly of the UV-C lamp, see section UV-C lamp.

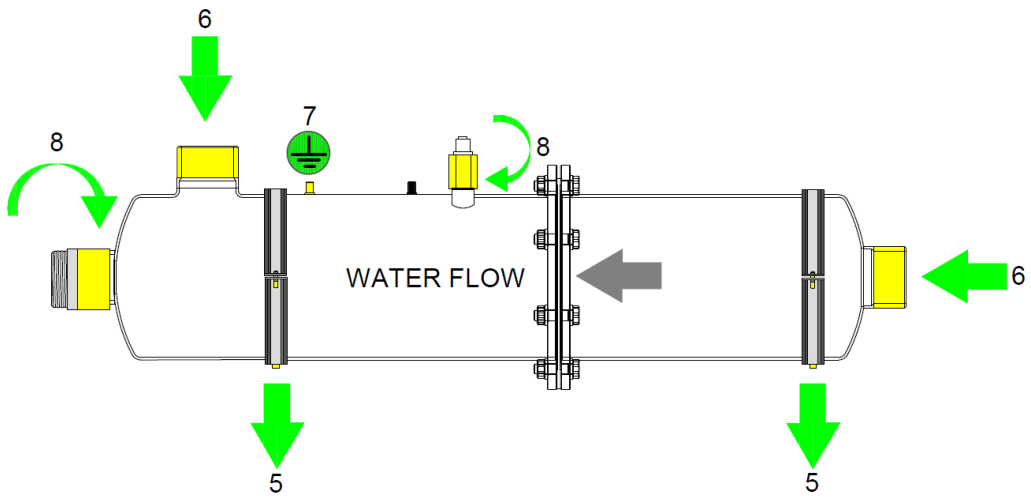

1. Mount the reactor on a suitable surface with the supplied mounting brackets **(5).**
2. Connect the reactor water-side **(6)** and take into account the water flow direction, which flows from left to right.
3. Install an electrical safety grounding **(7).**
4. Fix the thermocouple to the other M6 pin. (optional)
5. Check by hand that the reactor couplings **(8)** are tight enough (hand tight). If a UV-C sensor **(8)** is installed, also check by hand whether it is sufficiently tightened.

14.1.1 Pressure test

After the installation has been completed in its entirety, the circuit can be supplied with liquid up to and taking into account the maximum working pressure. During this step, check that the different connections and couplings are free of leaks. If this is the case, you can proceed to the installation of the UV-C lamp. If there is a leak, first dry it completely, fix the leak and again carry out a pressure test

If the maximum working pressure is increased after installation, carry out a pressure test as described above, where the UV-C lamps have been disassembled

14.1.2 Waste valve

Optionally, the device can be equipped with a waste valve. This must be used in the pipe circuit after the UV-C reactor chamber to ensure that demand can be created during the detection of too high a temperature.

There are different types of waste valves available, see the manual series for more information.
The waste valves feature a 0.5 inch BSP inner thread.

14.2 Use

When the device is installed according to the locally applicable safety standards and instructions, the device can be switched on. See section Commissioning.

14.3 Maintenance

UV-C light ensures the accelerated aging of various components installed in the reactor chamber. Due to the UV-C radiation, the material properties decrease qualitatively.
To guarantee safety and operation, it is necessary to replace these components on time. For more information about the maintenance interval for each part, see the relevant instruction manual.

In addition to the preventive replacement of components, cleaning the quartz sleeve and, optionally, the UV sensor lens is a maintenance issue. If a UV sensor is installed, it can be indicative of timely cleaning. If no UV sensor has been installed, then one must experimentally determine what an acceptable cleaning interval is.

14.3.1 Cleaning

If organic material is present in the liquid to be treated and/or if the hardness of the water is high, it is possible that deposits of these materials will appear on the quartz sleeve. This hinders the passage of UV-C radiation, thereby reducing the disinfecting effect of the system. Ensure that the correct safety precautions are observed and that the correct personal protection is used during cleaning, see the instructions per cleaning agent.

A UV sensor serves as an indication that the device may require cleaning;
The device should be cleaned at a UV intensity of 70% or lower.

The UV sensor and quartz sleeve must be disassembled to be cleaned.
See the sections Quartz sleeve and UV sensor for the work instructions.

14.3.1.1 Cleaning agents

Here are some suggestions when it comes to cleaning the various components.

Agent	Description
Lactic acid <20% solution	Removes lime, calcium, rust, magnesium and other dissolved minerals
Sulfamic acid <10% solution	Removes lime, calcium, rust, magnesium and other dissolved minerals
Phosphoric acid <30% solution	Removes lime, calcium, rust and colour stains
Citric acid <20% solution	Removes mineral scale deposits
Sodium hypochlorite <6% solution	Removes oil and grease
Acetic acid <20% solution	Removes oil and grease
Sulphuric acid <10% solution	Removes oil and grease
Innosoft B570	Removes superficial rust reactor chamber

15 Commissioning

Before commissioning, see the below mentioned parts for more information about the installation and other instructions;
Control unit – Installation
Reactor chamber – Installation

When the device is installed according to local safety instructions, then the device can be switched on for the first time.

15.1 Start-up device

- Switch on the supply voltage.
- Switch on the control unit by operating the Main switch.
- The operating status of the device can be seen on the LCD display of each control PCA. If this process is correct, the message SYSTEM OK! will eventually be displayed. This means that no malfunctions are active and the UV-C lamps are active.
- **Perform the following checks after the device has been put into operation;**
    - Check that the flow is correct and does not exceed the maximum treatment flow rate of the UV disinfection device. If the flow rate is higher than the prescribed maximum, the dose will be too low. Disinfection is not guaranteed in this case.
    - Check whether the parameters of the device are correct, related to the lamp power and the activated modules if these are installed.

If a UV sensor is used, the UV sensor set point must be determined. See the section UV sensor.

15.1.1 Start-up phase control PCA

If the start-up phase of the control PCAs is error-free, the following messages will automatically be displayed sequentially;

LAMP TYPE - - - W **V - . - - x**	Lamp power of installed UV-C lamp. Applied software version.
RELAY PCA **DETECTED**	Indicates whether or not an add-on relay has been activated and/or installed. (MOD1001)
PREHEATING LAMP #	The UV-C lamp is heated up. (soft start function)
IGNITING LAMP **STATUS**	The UV-C lamp is ignited/started up.
LAMP IGNITED!	The UV-C lamp is in operation.
HOURS LEFT - - - - - **SYSTEM OK!**	Operating condition OK, no active malfunctions and alarms.

15.2 Operation

The device contains control PCA with a micro-processor. With the use of the buttons and the information on the LCD display, settings can be adjusted and it is possible to retrieve device information such as the operating status. See section Control PCA.

16 UV-C lamp

The UV-C lamp must be replaced after the maximum life span has expired. *Normally it is possible to assume the maximum lamp hours based on the type of lamp. The life span of the lamp is shortened by frequently switching the power on and off

WARNING

To guarantee the operation of the device it is important to follow the replacement term of this part.

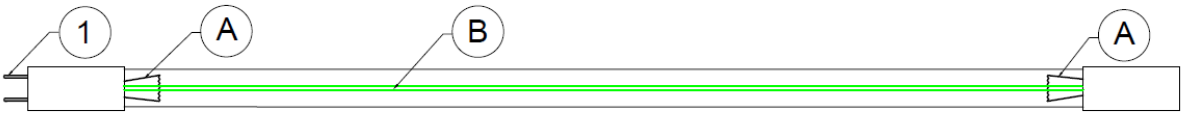

(1) Plug connection of the UV-C lamp.
(A) Filaments that are connected to the connection pins **(1)** of the UV-C lamp.
(B) Wires for connecting the rear filament with the connection pins **(1)** on the front.

16.1 Lamp connector

The UV-C lamp can be connected to the plug in two ways, both ways are correct.

The UV lamp has two filaments on the inside of the UV lamp.

These filaments are connected to the connection pins **(1).**

The top view **(2)** shows that there is a difference. The PINS with a distance of 7mm are connected to one filament.

The lamp connector **(3)** also has these distances. Making it possible to mount the lamp connector in two ways.

The lamp connector must be installed carefully to ensure the operation of the appliance.

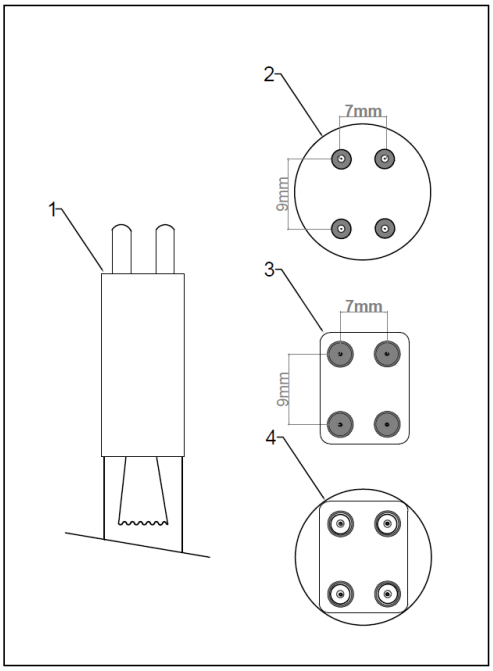

16.2 Disassembly

WARNING

- Switch off the UV-C device and isolate the device electrically.
- Release the reactor chamber from water pressure and isolate it if possible within the pipe circuit. Allow the appliance to cool for at least 10 minutes.
- Use the supplied cloth gloves to prevent fingerprints on it.
- See the illustration below for more insight into the assembly parts. **(A)** concerns the UV-C lamp, **(B)** the quartz sleeve and **(C)** the safety spring.

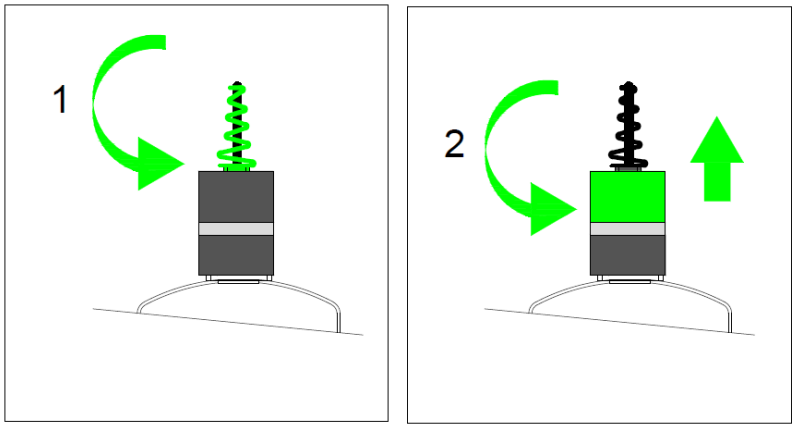

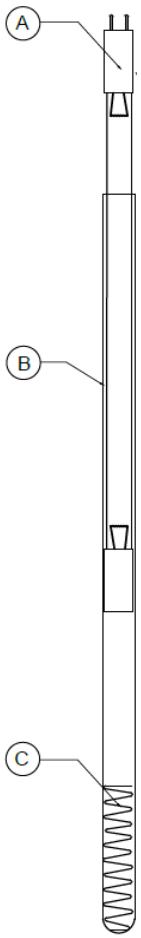

1. Loosen the spiral cap or swivel so that the lamp cable is free.
2. Hold the reactor coupling and loosen the lamp cable plug.

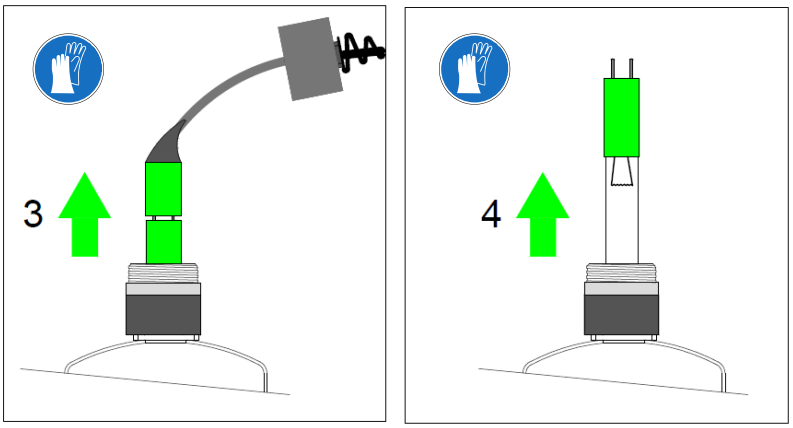

1. Slide the lamp cable cap back and pull the lamp cable out of the reactor chamber. Use gloves provided, pick up the UV-C lamp and disconnect the lamp cable.
2. Remove the UV-C lamp from the quartz sleeve and place it in a safe place.

16.3 Installation

The installation of the UV-C lamp must be carried out in reverse order compared to the disassembly. Use the supplied cloth gloves to prevent fingerprints on the glass.

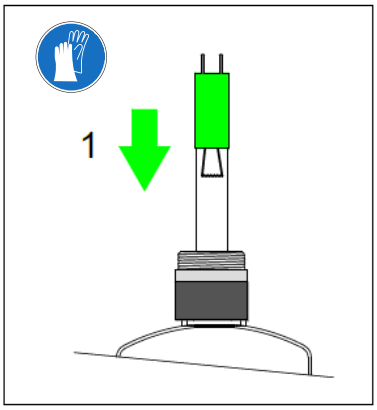

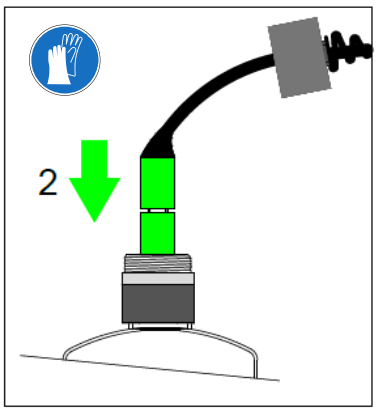

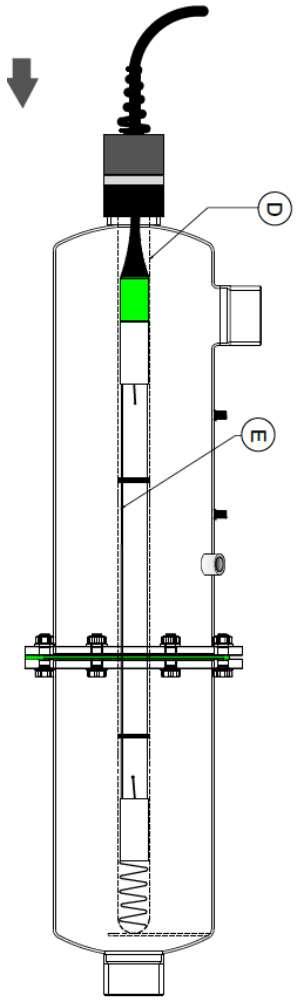

1. Check whether there is a safety spring in the quartz sleeve. Then slide the UV-C lamp 80% of the way in to the quartz sleeve.
2. Connect the lamp plug with the UV-C lamp and place the UV-C lamp *in the quartz sleeve, making sure that the jumper wires **(E)** do not obscure the UV sensor head.

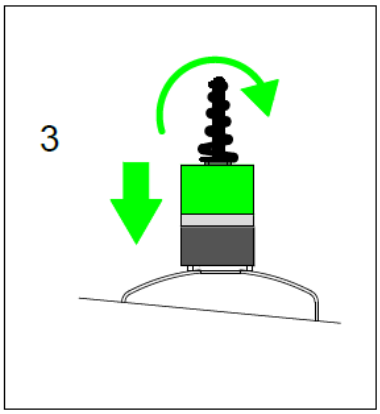

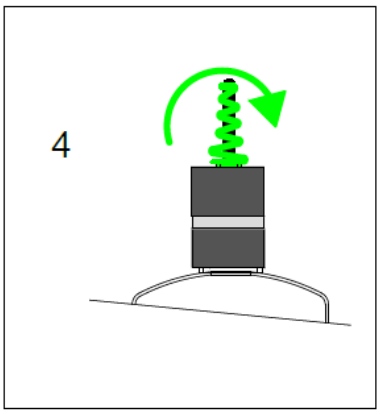

1. Tighten the lamp cable cap clockwise by a maximum of 10 Nm.(The lamp cable cap does not serve as a seal for the quartz sleeve).

   (D) Push the UV-C lamp into the quartz sleeve by sliding the lamp *... lamp cable inwards. Stop as soon as a resistance is felt, caused by the counter pressure of the safety spring.

2. Tighten the spiral cap clockwise to position the UV-C lamp correctly. To prevent the UV-C lamp from turning, it is advisable to hold the lamp cable while tightening the spiral top.

WARNING

Make the device operational for resumption disinfection if applicable.

* Optionally applied

16.4 Resetting UV-C lamp hours

If a UV-C lamp has been replaced the 'lamp hours' value must be reset in the software. Depending on the type of device, the control PCA component may be combined with a UV monitor. When to reset what;

Control PCA : Always reset value if the connected UV-C lamp has been replaced.
Note, one UV-C lamp is controlled by one control PCA.

UV monitor : Only reset value if all UV-C lamps have been replaced or the last one UV-C lamp in the series is replaced.

16.4.1 Control PCA

See section control PCA for the operation and use of this component.

RESET VALUES **STATUS**	Scroll with the button **[🡅]** or **[🡇]** in the main menu to this screen.
ARE YOU SURE? **UP=Y DWN=N**	Use **[🡄]** for changing the parameters. Confirm with **[🡅] YES** or **[🡇] NO** the selected value.
ARE YOU SURE? **OK**	Lamp hours reset.

16.4.2 UV monitor

See section UV monitor for the operation and use of this component.

Open the configuration menu by pressing **[🡄]** for about 3 seconds.
Scroll through the menu to the 'user counter' screen with **[🡄]**

User counter **h 123**	Reset with **[🡇]**
User counter **Clear?**	Confirm with **[🡄]**.
User counter **0**	Number of temporary system hours have been cleared, continue with **[🡄]** until the screen 'config write' is displayed.
Config **Write**	Continue with **[🡄]** to save all settings.
Config **OK! / END**	Setting saved correctly, software menu closes automatically.

17 Quartz sleeve

The quartz sleeve is the housing of the UV-C lamp and is mounted in the reactor chamber. The material of the tube is quartz glass, which allows the UV-C radiation generated by the UV-C lamp to pass to the liquid.

Due to the UV-C radiation this part is subject to wear and tear. In order to guarantee the operation of the device, it is important to follow the replacement term for this part and to clean the part on time. For the cleaning section see Reactor chamber - Cleaning.

17.1 Disassembly

WARNING

- Switch off the UV-C device and isolate the device electrically.
- Release the reactor chamber from water pressure and isolate it if possible within the pipe circuit.
- Drain the liquid present in the reactor chamber. Allow the device to cool for at least 10 minutes.
- Use the supplied cloth gloves to prevent fingerprints on the glass.
- Disassemble the UV-C lamp. See section Replace UV-C lamp

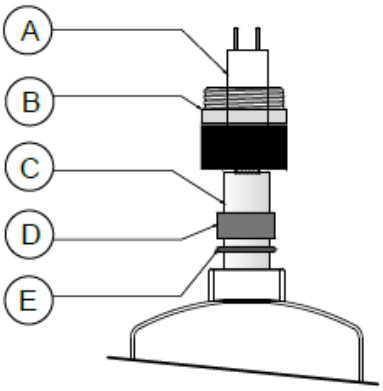

Overview of various components;

A UV-C lamp
B Reactor coupling
C Quartz sleeve
D Locking sleeve
E O-ring

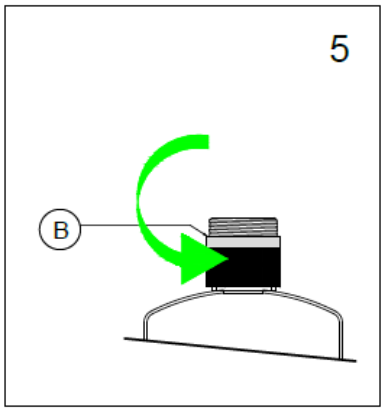

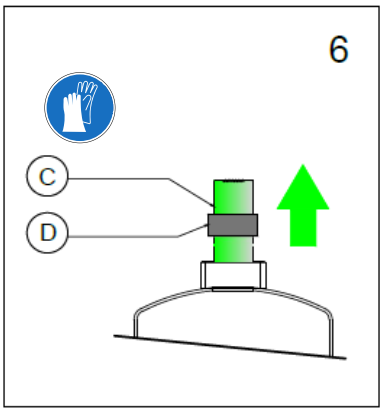

5. Unscrew the reactor coupling **(B)** by turning it anticlockwise and place it in an orderly location.
6. Carefully pull the quartz sleeve **(C)** out of the reactor chamber and remove the locking sleeve **(D).**

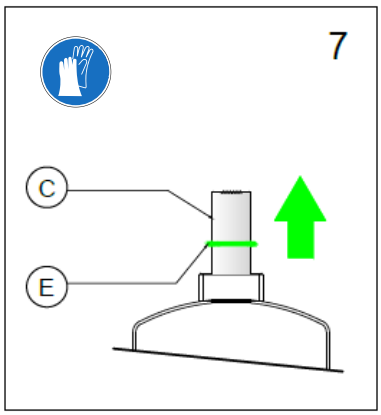

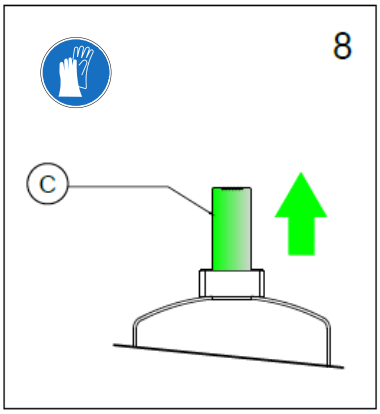

7. Pull out the quartz sleeve **(C)** so that the O-ring **(E)** is visible. Slide the O-ring of the quartz sleeve.
8. Remove the quartz sleeve **(C)** from the reactor chamber.

17.2 Installation

The assembly of the quartz sleeve should be carried out in the reverse order of disassembly. Use the supplied cloth gloves to prevent fingerprints on the glass. Always replace the O-ring **(E)** after disassembling the quartz sleeve.

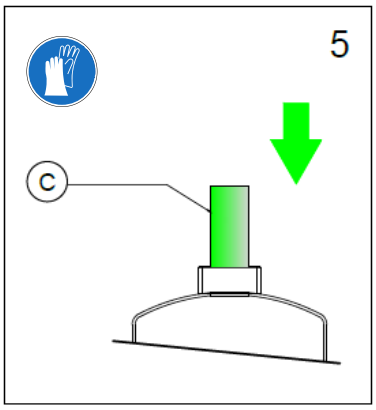

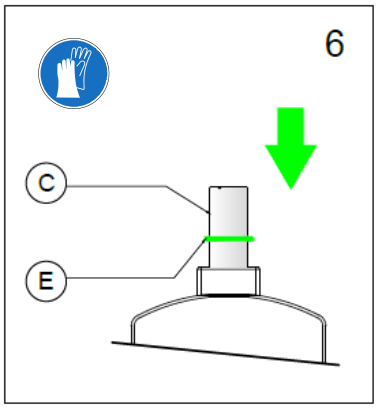

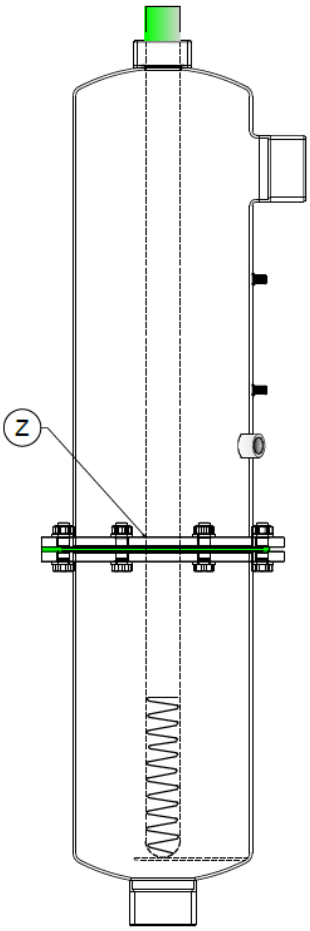

5. Place the quartz sleeve **(C)** in the reactor chamber.
   *The flow plate **(Z)** centers the quartz sleeve.*
6. Take a **new** O-ring **(E)** and slide it over the quartz sleeve.

See next the locking sleeve and an O-ring. As can be seen, the locking sleeve has an chamfered and a flat side.

Flat side	Easy positioning of the O-ring
Chamfered side	Sealing quartz sleeve.

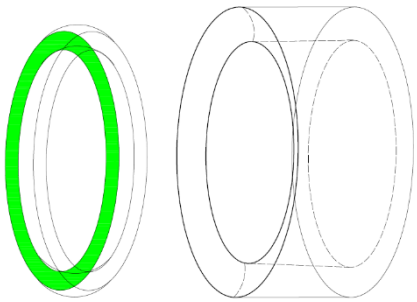

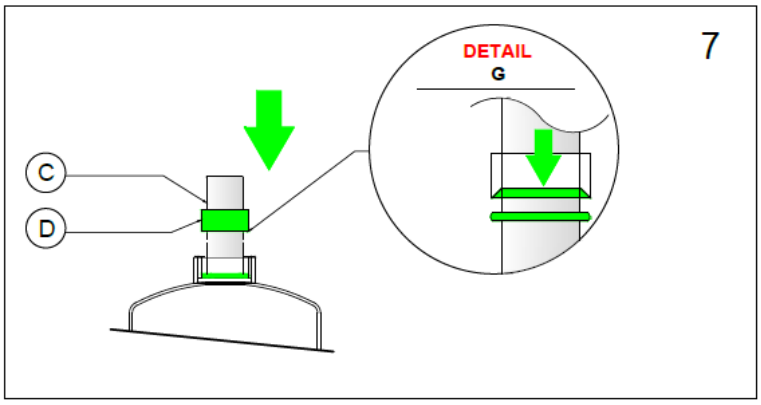

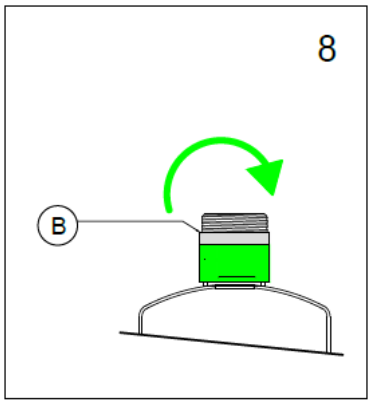

7. With the flat side of the pressure bush **(D)**, press the O-ring into position, pull the quartz sleeve **(C)** back sufficiently (50 mm) to ensure that it fits against the reactor coupling. Turn the locking sleeve **(D)** over so that the bevel is pressed against the O-ring **(detail G).**
8. Mount the reactor coupling **(B)** by turning it clockwise by a maximum of 25Nm. After securing, feel whether the quartz sleeve is fixed against the edge of the reactor coupling.

WARNING

Perform a pressure test after the assembly work to prevent damage to other parts.

Make the device operational for resumption disinfection if applicable

18 UV sensor

A UV sensor is subject to pollution, just like the quartz sleeve. See section Reactor chamber - Maintenance.

The UV sensor is also subject to wear due to exposure to UV-C radiation. To guarantee the operation of the device, it is important to follow the replacement term for this part.

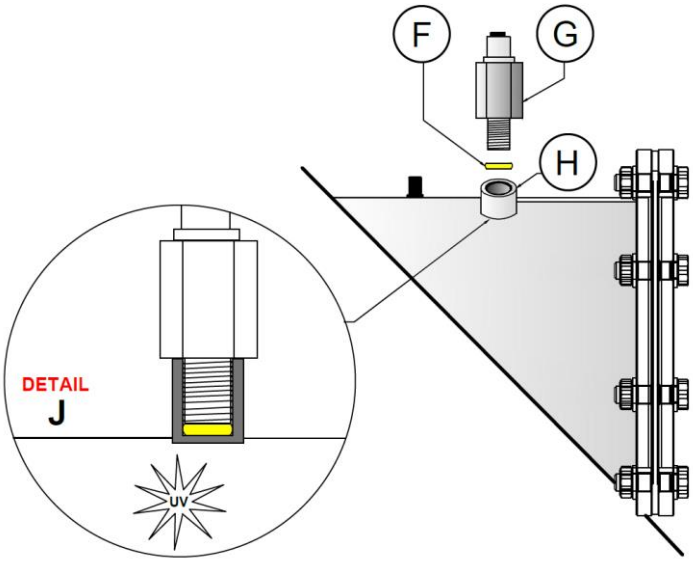

Overview of the different components

F O-ring UV sensor
G UV sensor
H UV sensor chamber
J Detail illustration, light intensity measurement

18.1 Type of UV sensor

A device can be equipped with a UV sensor, see the properties of the device for more information. In this section you can read which different UV sensors are available.

Relative

This type of UV sensors is used in single UV-C lamp devices, where the measurement is done directly by the control PCA. The percentage displayed is a relative value of the UV-C light intensity.

Digital

This type of sensors is used in combination with a UV monitor. The number of lamps in the system is generally more than one. The light intensity shown is the UV-C output generated by the UV-C lamp in watts per square meter. It is possible to convert this value into a percentage.

18.2 UV sensor cable

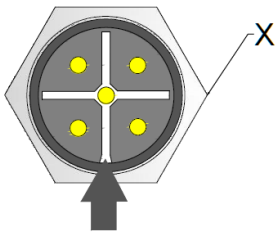

The UV sensor has a 5-pin plug (X) and the UV cable (Y) has a counterpart that can only be mounted in one way.
The fixing is done by tightening the plug in the UV sensor housing.

Relative UV sensor cable
This cable is characterized by 2-wires.
For more information, see the section Option Board.

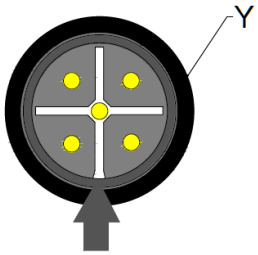

Digital UV sensor cable
This cable is characterized by 4-wires.
For more information, see the section UV monitor.

18.3 Disassembly

WARNING

- Switch off the UV-C device and isolate the device electrically.
- Release the reactor chamber from water pressure and isolate it if possible within the pipe circuit.
- Drain the liquid present in the reactor chamber.
- Allow the device to cool for at least 10 minutes.

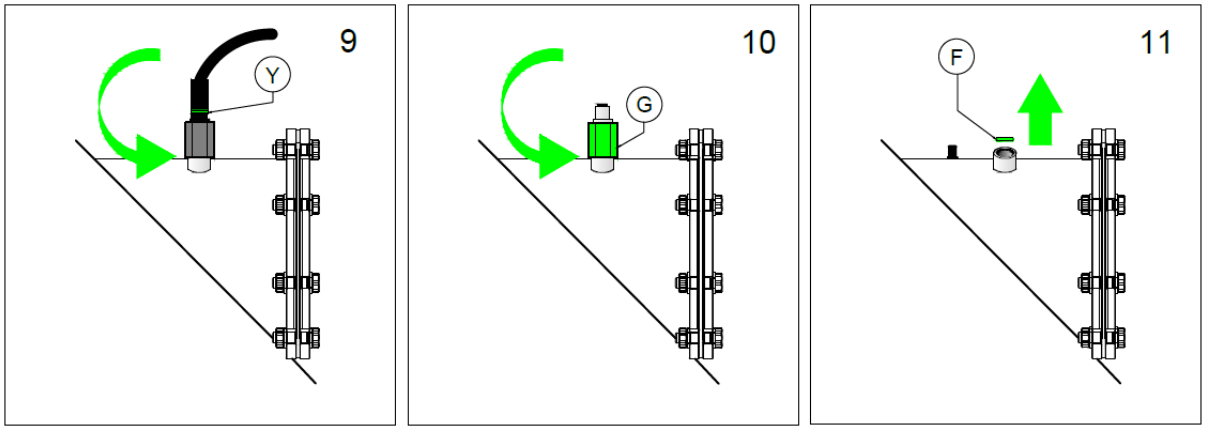

9. Disassemble the UV sensor plug **(Y)** by loosening it anticlockwise. Carefully pull the plug during disassembly to facilitate this.
10. Loosen the UV sensor **(G)** by hand counter clockwise to disassemble it. If it cannot be unscrewed by hand, use a suitable spanner.
11. Remove the O-ring that is mounted in the UV sensor chamber with a narrow screwdriver or O-ring trigger. Be careful not to damage the threads of the chamber.

18.4 Installation

The installation of the UV sensor must be carried out in the reverse order of disassembly. Always replace the O-ring after disassembling the UV sensor.

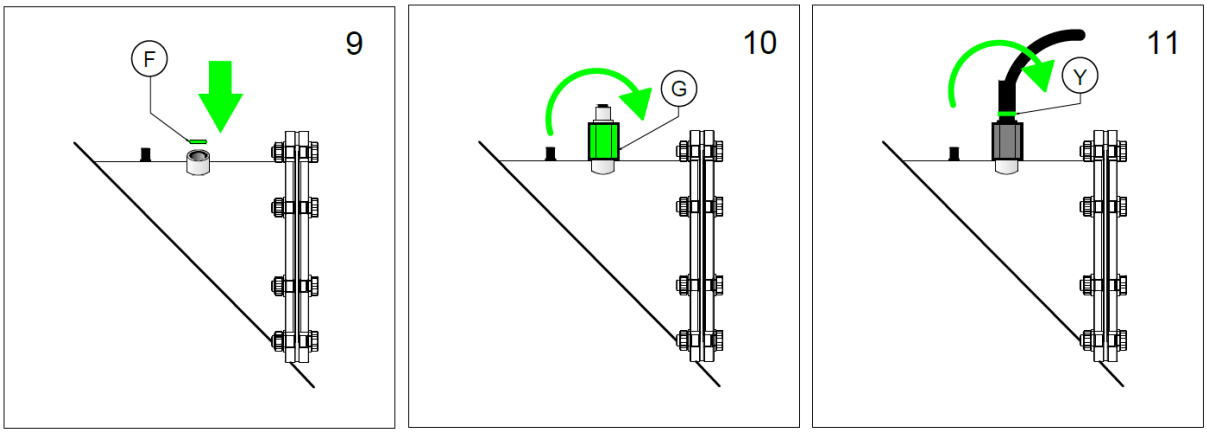

9. Mount the O-ring in the UV sensor room. The O-ring can be fixed by pushing it in with a non-sharp object. Ensure that the thread of the chamber is not damaged.
10. Use stainless steel assembly paste on the thread of the UV sensor before it is mounted. Then tighten the UV sensor clockwise with a maximum tightening torque of 20Nm (hand fixed).
11. Mount the UV sensor cable to the UV sensor by pressing the plug on the UV sensor and turning it clockwise.

WARNING

Perform a pressure test after completing assembly work to prevent damage to other parts.

Make the device operational for resumption disinfection if applicable.

18.5 Set point UV sensor

The advice is to reset the set point after the following work;
- Putting the device into operation.
- After replacement of the UV-C lamp in combination with the cleaning of the quartz sleeve and sensor lens.
- After replacing the UV-C sensor.

Observe the following conditions for determining the set point;
- Transmission value of liquid stable
- No air present in the reactor room
- UV-C lamp at operating temperature
- UV-C lamp wires not for the sensor lens

If a new UV-C lamp is installed, the set point must be set to 110% at the photodiode sensor. With the digital sensor, the UV sensor has to be calibrated again at 100% after about 100 hours. The reason for the UV-C intensity reduction is related to a normal phenomenon, namely the burn-in period of the UV-C lamp.

18.5.1 Determining the PCA set point control

Use the control PCA to determine the set point. Should it appear that a UV monitor has been used, this component will perform the UV-C measurement.

See section control PCA for the operation of this component.

UV CALC% : - - - % **DEFAULT 110%**	Scroll with the button **[🡅]** or **[🡇]** in the main menu to this screen.
UV CALC% : - - - % **DEFAULT 110%**	Use **[🡄]** for changing the parameters. Change the value with **[🡅]** or **[🡇]**and confirm this choice with **[🡄]**.
ARE YOU SURE? **UP=Y DWN=N**	Confirm the selected value with **[🡅] YES** or **[🡇] NO** and confirm this choice with **[🡄]**.
CALIBRATION OK	New set point successfully implemented.

18.5.2 Determining the set point UV monitor

See section UV monitor for determining the set point of the UV sensor.
Assess which UV sensor the device is equipped with, for a correct execution.

19 Flow management system

The reactor chamber contains a flow plate. This part is made of PTFE material and is intended to optimize the liquid flow in the chamber, in addition it centers the quartz sleeve.

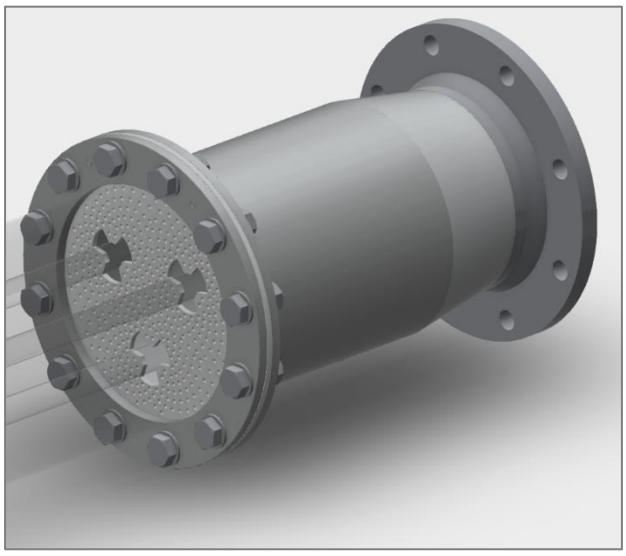

The flow plate is exposed to UV-C radiation, so this component is subject to wear and aging. Observe the replacement time to ensure the operation of the device and safety.

There are different types of flow plates, see the manual for more information.

19.1 Disassembly

WARNING

- Switch off the UV-C device and isolate the device electrically.
- Release the reactor chamber from water pressure and insulate it if possible within the pipe circuit.
- Drain the liquid present in the reactor chamber. Allow the device to cool for at least 10 minutes.
- Remove the quartz sleeve(s). See section Quartz sleeve for the work instructions.

- If necessary, disassemble the reactor from the pipe circuit. This depends on the situation, if the reactor is equipped with more than 1 UV-C lamp, it must always be decided to dismantle the reactor chamber. Cause, application of dowel pins.

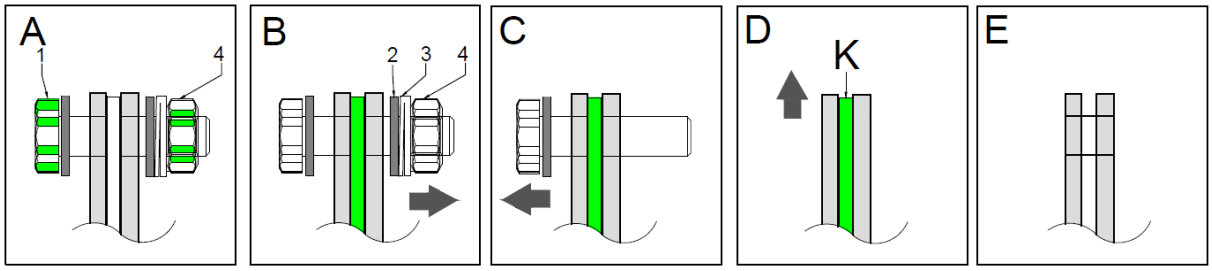

A. Dismount the flow plate by loosening the nuts **(4)** in a counter clockwise direction from the bolts **(1).**
B. Remove the nut combination **(2) (3) (4)** and place it in an orderly location.
C. Remove the bolts **(1)** from the flange so that the flow plate can be disassembled.
D. Disassemble the flow plate **(K)** by removing it between the flanges.
E. Drain plate removed.

19.2 Installation

The installation of the flow plate must be carried out in the reverse order of disassembly.

WARNING

- Depending on the type of device, note the passage(s) of the flow plate **(B)** for the quartz sleeve during installation. The flow plate serves as a quartz sleeve holder, the through holes must be mounted opposite the lamp ports of the reactor chamber.

[A] Quartz sleeve passage
[B] Bolt passage
[C] Dowel passage

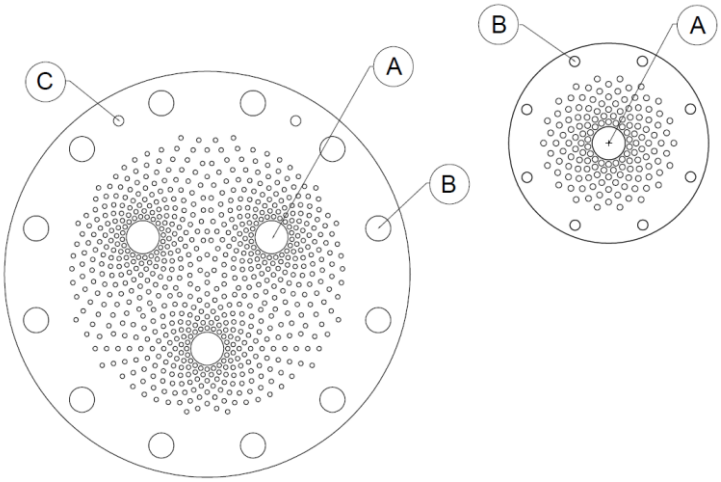

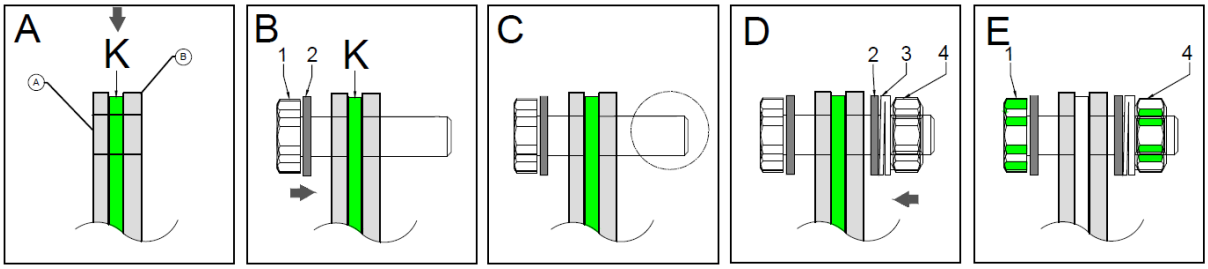

A. Place the new flow plate **(K)** between the two flanges. Note that mounting holes of the flow plate and flanges are located opposite each other.
B. Place the bolt **(1)** and washer **(2)** in the flange.
C. Apply assembly paste to the section of the bolt which protrudes through the flange.
D. Fix the flow plate by tightening the nuts **(4)** by hand. The sequence concerns washer **(2),** spring washer **(3)** and nut **(4)**. For the fixing sequence of the bolts, see the illustration on the next page.
E. Tighten the nuts **(4)** with a torque wrench, see on the next page more information about the conditions and procedure.

The sequence of fixing the bolt-nut combination is shown in the illustration alongside.

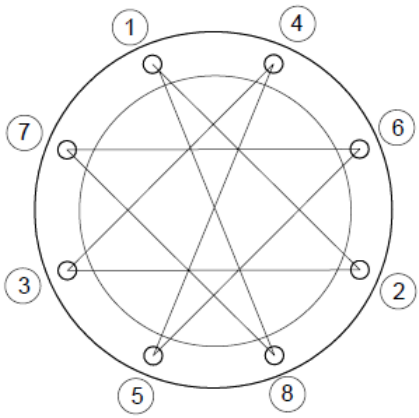

1. Start tightening at **(1)** and fix the bolts with a "star" tightening sequence.
2. Tighten all bolts to check step 1.

Note, the number of bolts-nuts is dependent on the type of device, as well as the tightening torque.

Tightening torque

M8	10Nm
M16	50Nm
M20	80Nm

WARNING

Perform a pressure test after the assembly work to prevent damage to other parts.

- **Make the device operational for resumption disinfection if applicable.**

20 Control PCA

The control PCA is the electrical unit that controls one UV-C lamp by means of software. The control PCA can be prepared with an option board, for the addition of optional components such as UV intensity measurement and temperature protection.

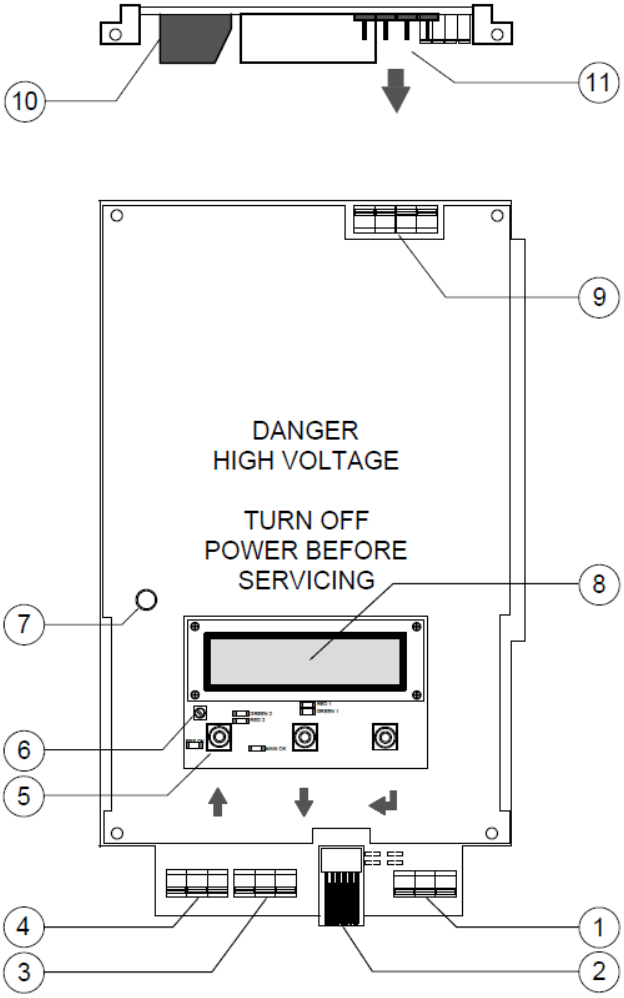

Item	Name	Function
1	Power supply connector	Incoming supply 230VAC
2	Update port / Add-on relay connector IN	Implement software update or connection for the add-on relay.
3	Alarm contact MAIN	Potential free contact for main alarm messages.
4	Alarm contact PRE	Potential-free contact for pre-alarm messages.
5	Control buttons	For operating the various parameters and settings.
6	Contrast adjustment screw	To adjust the LCD display contrast
7	Reset button	Component reset function
8	LCD display	Display of the various parameters and settings.
9	UV-C lamp connector	Connection for add-on relay or UV-C lamp cable.
10	Add-on relay connector OUT	Plug connection for cable connected to pos.2.
11	Add-on relay	Modification circuit board for UV-C lamp circuit.

20.1 Dimensions

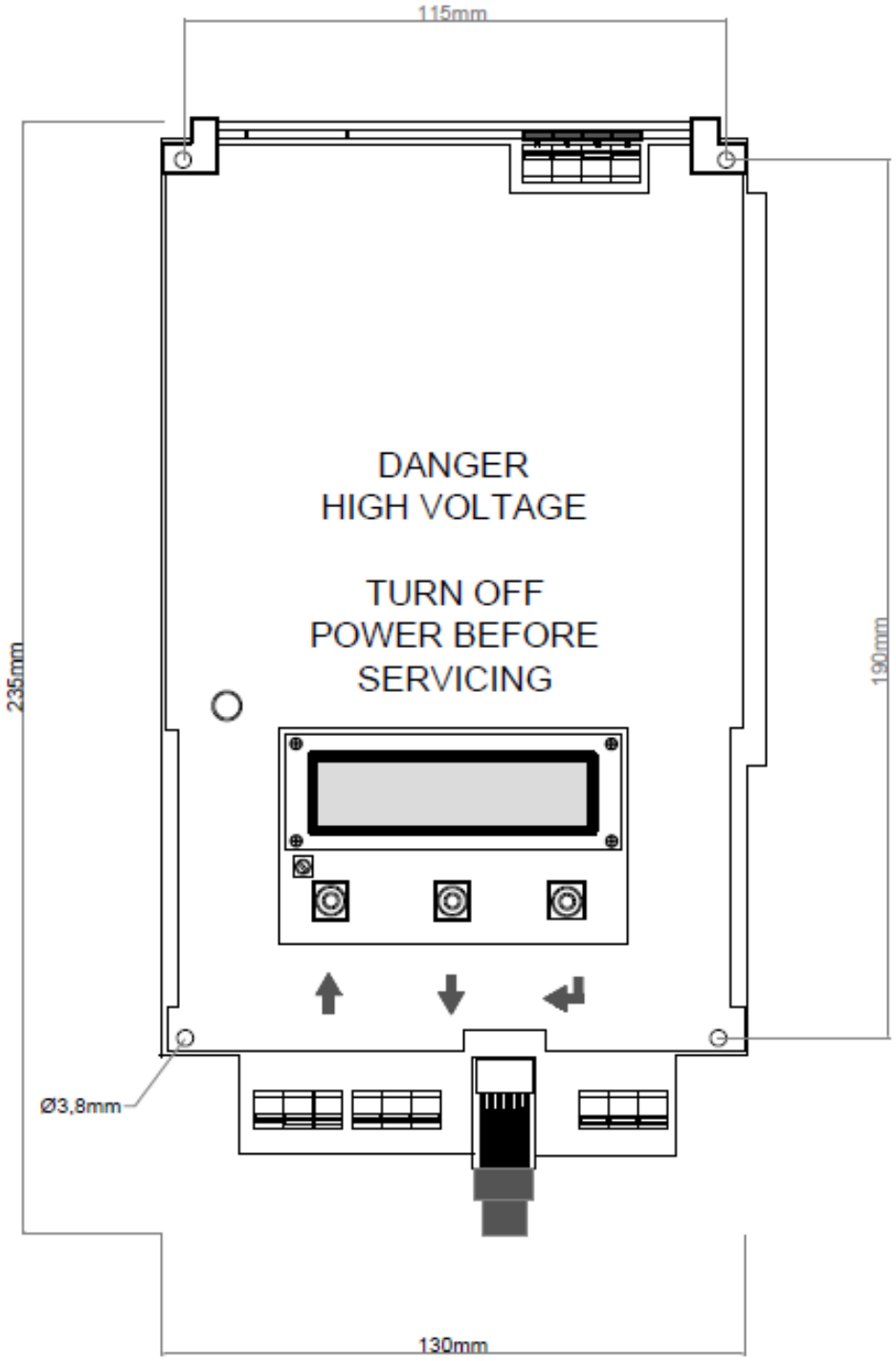

20.2 Electrical connection

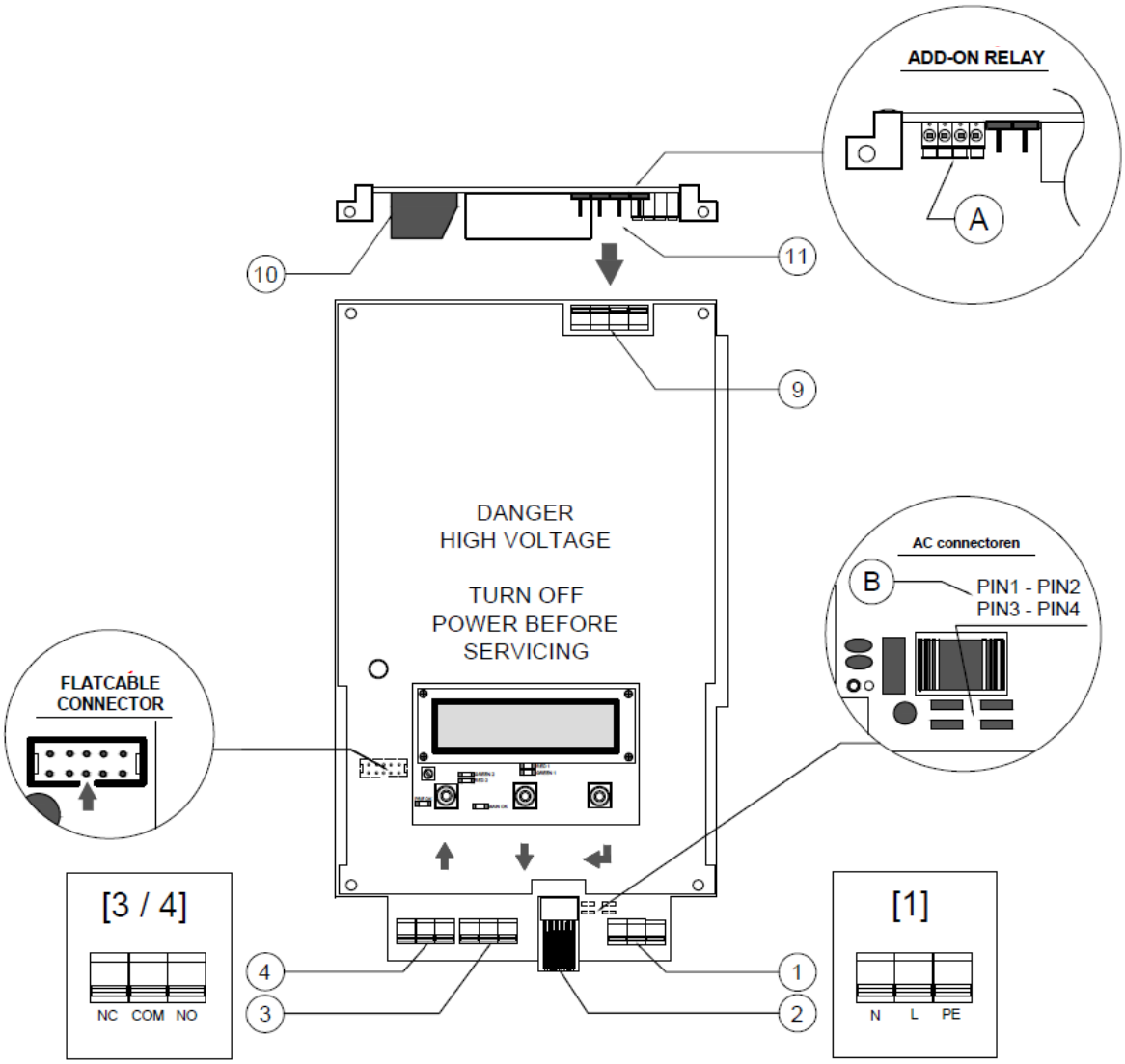

Connectors used within the control PCA can be operated by pressing them gently. As a result, the clamps are unlocked and the cable can be disconnected.

[1]	Supply voltage IN 230VAC.	N	- Neutral/blue
		L	- Live/brown or black
		PE	- Grounding/yellow - green
[2]	5V connection for add-on relay, connected to **[10]**		
[3]	Main alarm potential free contact	NC	- normally closed
		COM	- changeover contact
		NO	- normally opened
[4]	Pre-alarm potential free contact	NC	- normally closed
		COM	- changeover contact
		NO	- normally opened
[9]	UV-C or add-on relay connector **[11]**.		
[10]	5V connection of add-on relay, connected to [5]		
[11]	Add-on UV-C lamp connector for control PCA.		

Flatcable	For connecting the option board with the control PCA
AC connectors	For connecting the 230VAC **detail [B]**

Detail B - POWERCONNECTOR

Connector	PIN 1	PIN 2	PIN 3	PIN 4
Switch	Black (1)	Blue (1)	Brown (2)	Blue (2)
No switch	To PIN 3	To PIN 4	To PIN 1	To PIN 2

UV lamp cable connector	To connect the UV-C lamp cable to the add-on relay or Control PCA **[9]** or detail **[A]**

Detail A – LAMPCABLE COLOURS

Type lamp cable	PIN 1	PIN 2	PIN 3	PIN 4
Normal	White	Yellow	Green	Brown
Marine	Gray	Black	Blue	Brown
Radox	Code 1	Code 2	Code 3	Code 4

20.3 Features

The control PCA is the component that controls the UV-C light via software. The device has the following options when it comes to operating and displaying the parameters;

- Device status
- Menu language
- Alarm settings
- UV intensity
- Temperature protection

Note that certain information depends on the installed options.

20.3.1 Operation

The control PCA contains 3 buttons with which the device can be operated, see below the available buttons including meaning;

[🡐]	**ENTER**	Confirm selected value Open submenu
[🡅]	**UP**	Increase value Scroll function
[🡇]	**DOWN**	Decrease value Scroll function

20.3.2 Basic menu

The basic menu contains a number of data, from which submenus can be opened from this menu.

HOURS LEFT - - - - -H **STATUS**	Number of burning hours until replacement of UV-C lamp. Status concerns the operating status	
STARTS: - - - **STATUS**	The number of times the installed UV-C lamp has started.	
SYS STARTS: - - - **STATUS**	The number of times the device has been started up.	
SYTEM HRS: - - - **STATUS**	The total number operating hours of the device.	
LANGUAGE: ENG **STATUS**	SUBMENU	**MENU LANGUAGE.**
LAMPTYPE: - - - W **V - . - -x**	SUBMENU	**PARAMETERS DEVICE.**
UV CALC % : - - - % **DEFAULT 110%**	SUBMENU	**SETPOINT UV SENSOR.**[1]
ALARM SETTINGS **STATUS**	SUBMENU	**ALARM SETTINGS.**
RESET VALUES **STATUS**	SUBMENU	Section UV-C LAMP**.**

[1] Depending on the version, optional.

20.3.3 Operation status

The device has various types of messages. In this section, the normal operating messages are displayed, see section Control PCA status for the other notifications.

HOURS LEFT - - - - - **SYSTEM OK!**	Device in normal operating condition.
HOURS LEFT - - - - - **(- - - %) UV**	The measured relative UV intensity.
HOURS LEFT - - - - - **!!!! % UV**	The set point of the UV sensor must be determined, Section UV sensor.
HOURS LEFT - - - - - **UV PRE ALARM**	The UV intensity is lower than the value of the pre-alarm.
HOURS LEFT - - - - - **UV MAIN ALARM**	The UV intensity is lower than the value of the main alarm.
HOURS LEFT - - - - - **TEMP PRE ALARM**	The temperature measured by the thermocouple is higher than the pre-alarm value.
HOURS LEFT - - - - - **TEMP TOO HIGH**	The temperature measured by the thermocouple is higher than the main-alarm value.
HOURS LEFT - - - - - **HOURS PRE ALARM**	The maximum UV-C lamp hours have almost expired. From 730 to 0 hours remaining. Pre-alarm active.
HOURS LEFT - - - - - **LAMPLIFE EXPIRED**	The maximum UV-C lamp hours have passed. Default <0 hours. Main alarm active.

20.3.4 Menu language

For the menu language you can choose from three different languages, see below for how to set this;

LANGUAGE: ENG **STATUS**	Scroll with the button **[🡅]** or **[🡇]** in the main menu to this screen.
LANGUAGE: ENG **STATUS**	Use **[🡄]** for changing the parameters. Change the language with **[🡅]** or **[🡇]**and confirm this choice with **[🡄]**. (ENG – English / GER – German / NED – Dutch).
LANGUAGE: GER **OK**	The language has been changed to the German language.

20.3.5 Alarm settings

The device gives alarm notifications depending on the set parameters. In this menu these parameters can be found and modified. The messages about the UV sensor and the temperature protection are dependent on the design of the device.

The password for accessing the alarm messages menu: **8131**

Scroll through the menu with the button [🡅] or [🡇]

ALARM SETTINGS **STATUS**	Scroll with the button **[🡅]** or **[🡇]** in the main menu to this screen. Use button **[🡄]** to access this submenu.
0 1 2 3 4 5 6 7 8 9 **ENTER PASSWORD**	Use the **[🡅]** or 🡇button to change to the correct number and confirm with **[🡄]** . (select password 8131)
MAX LAMP LIFE **- - . - - - H**	Displays the maximum UV-C lamp hours. This maximum is different for each type of UV-C lamp. If the control PCA has to be replaced, it is advisable to override the current lamp hours. Section Maintenance
HOURS PRE-ALARM **730**	Value for generating a pre-alarm message related to the operating hours of the UV-C lamp. Adjust by pressing **[🡄]**. Change with **[🡅]** or **[🡇]** **.** Confirm with **[🡄]**.
HOURS MAIN ALARM **0**	Maximum value for generating a main alarm message related to the remaining operating hours of the UV-C lamp. Adjust by pressing **[🡄]**. Change with **[🡅]** or **[🡇]** **.** Confirm with **[🡄]**.
TEMP PRE-ALARM **30°C**	Value for generating a pre-alarm message related to the temperature. Adjust by pressing **[🡄]**. Change with **[🡅]** or **[🡇]** **.** Confirm with **[🡄]**.
TEMP PRE-ALARM **35°C**	Maximum value for generating a main alarm message related to the temperature. Adjust by pressing **[🡄]**. Change with **[🡅]** or **[🡇]** **.** Confirm with **[🡄]**.
FLUSH TIME **10 SEC**	The time in seconds during which the flush valve is opened when the temperature is too high. Adjust by pressing **[🡄]**. Change with **[🡅]** or **[🡇]** **.** Confirm with **[🡄]**.
WAITING TIME **30 SEC**	The waiting time in seconds during which the flush valve is not opened when the temperature is too high. Adjust by pressing **[🡄]**. Change with **[🡅]** or **[🡇]** **.** Confirm with **[🡄]**.
UV PRE-ALARM **70 %**	Value for generating a pre-alarm message related to the measured intensity by the UV sensor. Adjust by pressing **[🡄]**. Change with **[🡅]** or **[🡇]** **.** Confirm with **[🡄]**.
UV PRE-ALARM **50 %**	Minimum value for generating a main alarm message related to the measured intensity by the UV sensor. Adjust by pressing **[🡄]**. Change with **[🡅]** or **[🡇]** **.** Confirm with **[🡄]**.

MUTE **ON**	Activate or deactivate sound signals, this is active by default. Adjust by pressing **[🡐]**. Change with **[🡅]** or **[🡇]** **.** Confirm with **[🡐]**.
TEST ALARM **OFF**	Function for testing the potential free contacts and the operation of the flush valve. Adjust by pressing **[🡐]**. Change with **[🡅]** or **[🡇]** **.** Confirm with **[🡐]**.

20.3.6 Device status

The following messages can be displayed by the control PCA;

RELAY PCA **PLEASE CONNECT**	Start-up phase No add-on relay has been detected. If it is not installed, press **[🡐]** to continue. Otherwise, check the plugs of the add-on relay
SW UPDATE OK **V - - . – to V - - . -**	Start-up phase If a software update has been implemented, the screen displays the old and new program version.
OPTION SEARCH	Start-up phase After an update, the control PCA will automatically register the option board. If it is not installed, press **[🡐]** to continue.
MODULE	Start-up phase If the option board is registered after an update. Activate the installed modules (+UVS / +TSS / +TSD)
INTERNAL ERROR **CALL SERVICES**	Error status Hardware setting error, contact the supplier.
IGN. DET*****HZ	Error status UV-C lamp is ignited too early, check among other things the connection between the UV-C lamp and control PCA.
HOURS LEFT - - - - - **POWERDIP 400V**	Error status The control PCA circuit voltage is too low, UV-C lamp is preventively switched off to prevent damage. Check mains voltage.
HOURS LEFT - - - - **TIMEOUT - - SEC**	Error status Time-out of 15 sec. after registering a power dip 400V. After the timeout, the control PCA will again assess the circuit voltage. If OK, the UV-C lamp will be restarted.
LAMP NOT IGNITED **TRYING AGAIN**	Start-up phase UV-C lamp is not lit, there is 5x an attempt, if the UV-C lamp does not start successfully, the message 'lamp defect' is displayed.
HOURS LEFT - - - - - **LAMP DEFECT**	Error status UV-C lamp went outside the specified range or was not lit during the start-up phase.

PCA DEFECT	Error status Hardware error, update the software of the control PCA initially or contact the supplier.
CURRENT LIMIT	Error status Software-based current protection, contact the supplier if this message remains active.
CURRENT LIMIT 2	Error status FLTA hardware moderate current protection, contact the supplier if this message remains active.
LAMP UNKNOWN	Error status Hardware error, contact the supplier.
HOURS LEFT - - - - **NO OPTIONDATA**	Error status Data connection between control PCA and option board not in order.
HOURS LEFT - - - - **TRANSISTOR TEMP**	Error status The registered hardware temperature of the control PCA is too high. The UV-C lamp is switched off preventively.
HOURS LEFT - - - - **TRANS. TEMP TO**	Error status Time-out of 300 sec. after registering a too high control PCA temperature. If the temperature is good, the UV-C lamp is restarted.
HOURS LEFT - - - - **POWER FAIL**	Error status AC Mains voltage error, UV-C is not restarted. Check the incoming power supply.

20.4 Maintenance

The device registers a number of data, including the operational UV-C lamp hours. A UV-C lamp has a maximum number of burning hours, after which the UV-C output decreases and the UV-C lamp has to be replaced. To tell the device that the UV-C lamp has been replaced, the lamp hours and starts must be reset.
See section UV-C lamp.

If a UV sensor is installed; it is important that the setpoint of the sensor is determined after the lamps have reached a temperature sufficient for maximum UV-C output. See section UV sensor.

20.4.1 Overriding lamp hours

If the UV-C lamp has not been replaced after installing a new control PCA, it is important to set the UV-C lamp hours within the control PCA.

Use the control PCA buttons to scroll to the alarm settings submenu.
The password of this menu: **8131**

Scroll through the menu with the [🡅] or [🡇] button

ALARM SETTINGS **STATUS**	Use the [🡅] or [🡇] button in the main menu to scroll to this screen. Use button **[🡄]** to access this submenu.
0 1 2 3 4 5 6 7 8 9 **ENTER PASSWORD**	Use the [🡅] or [🡇] button to change to the correct number and confirm with **[🡄] .** (select 8131)
MAX LAMP LIFE **- - . - - - H**	Displays the maximum UV-C lamp hours. Suppose there are still 7290 lamp hours remaining, then this can be done as follows; Adjust by pressing **[🡄]**. Use [🡅] or [🡇] to change the value from 8000 to 7290 hours. Confirm this choice with **[🡄]**. Go back to the main menu, the **Hours Left** is now 6580 ~~(2x 710hours~~). Open the **Alarm settings** submenu again. Adjust the set value 7290 by pressing **[🡄]**. Use [🡅] or [🡇] to change the value to the original value (8000hours). Confirm this choice with **[🡄]**. Go back to the main menu, the **Hours Left** is now 7290 hours.

At the next UV-C lamp switch the lamp hours have to be reset, after the reset the value of original maximum lamp hours is applied as value.

21 Option Board

The option board is the electrical unit that is connected to the control PCA by means of a flatcable. This component concerns an extension of the device for the addition of a relative UV-C sensor, thermocouple and possibly a flush valve. This component must always be combined with a control PCA and therefore cannot function standalone.

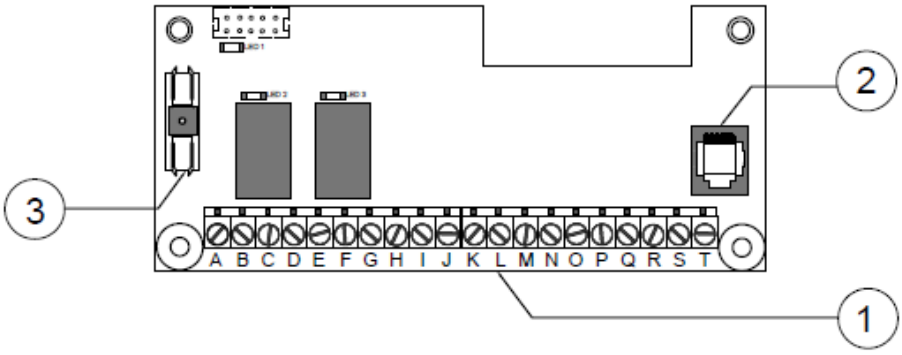

Item	Name	Function
1	Connector 2x 10 pole	For connecting various components.
2	Update connector	Implement software update.
3	Fuse holder	Surge protection for flush valve (2A T)

21.1 Dimensions

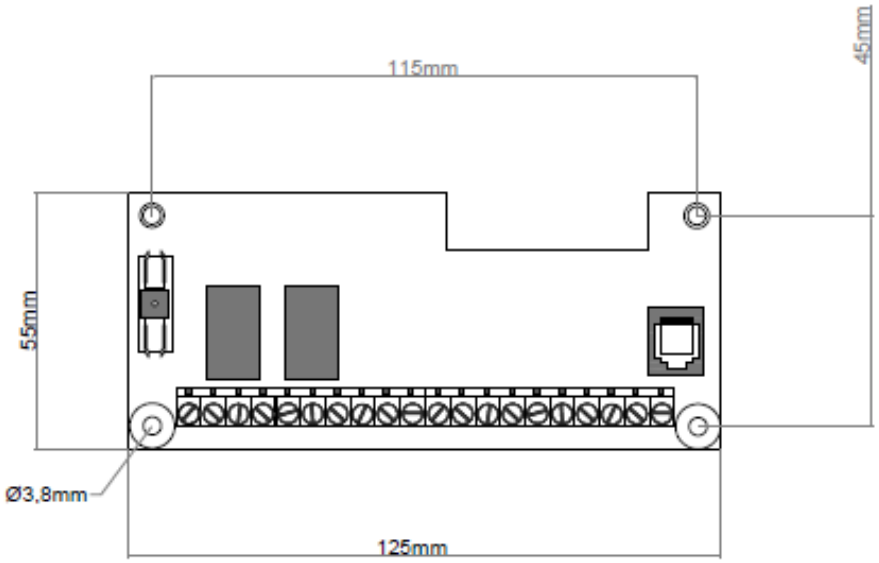

21.2 Electrical connections

Flatcable For connecting the option board with the control PCA.
[1] Different connection options for the various components

#	Description	Vein
A	[L] 230VAC switch	Black
B	[N] 230VAC switch	Blue
C	[PE] Grounding	Green/yellow
D	[PE] Grounding flush valve	Green/yellow
E	[N] 230VAC flush valve	2
F	-	
G	[L] 230VAC flush valve	1
H	[NC] TSS function	-
I	[COM] TSS function	-
J	[NO] TSS function	-
K	-	
L	-	
M	-	
N	-	
O	[+] UV sensor	Blue
P	[-] UV sensor	Black
Q	[-] Temperature sensor	White
R	[+] Temperature sensor	Green
S	[S] Temperature sensor	Shielding
T	-	

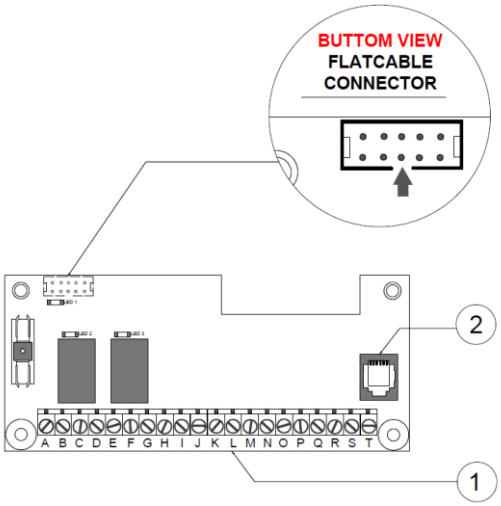

22 Troubleshooting

Before replacing or repairing, it must be determined why the device does not function correctly. This section describes undesirable situations with possible solutions.

Type	Problem cause	Procedure
[UV-C lamp does not light up]	Lamp defective	Replace lamp according to procedure
	Control PCA temperature too high	Check the message displayed by control PCA Compare device specifications with the environment.
	Reactor chamber temperature too high	Check the message displayed by control PCA Check if there is liquid and if there is flow in the reactor chamber. Compare device specifications with the environment. Assess whether the alarm settings are sufficient.
	Flush valve active	Control operation and connection of the flush valve. Assess whether the valve is activated due to too high a temperature.
	Worn lamp cable	Check the clamping force of the lamp connector. Replace the lamp cable
	Damaged lamp cable	Turn off the device immediately. Replace the lamp cable
	Installation lamp cable not installed correctly.	Assess whether the lamp cable is installed according to the working instructions.
	Short circuit control PCA	Check at the reactor side at the lamp connector for leaks. Assess the UV-C lamp optically for deviations.
	Failure control PCA	Check the message displayed by the control PCA. Determine what this notification contains.
	No power supply	Check incoming supply voltage.
	Main switch not switched on	Switch on the device with the main switch.

Type	Problem cause	Procedure
[UV intensity too low]	Pollution	Clean the quartz sleeve and UV sensor lens.
	UV-C lamp filaments blocking the sensor lens	Mount all lamps with the filaments facing down in the quartz sleeve.
	Transmission of the liquid decreased	Set up an investigation into the stability of the transmission value. Improve transmission.
	Liquid temperature increased and/or decreased	Check fluctuation of temperature. If constantly re-determined setpoint.
	Aging	The UV sensor and/or quartz sleeve was not replaced within the replacement term.
	Aging	The lamp is out of date and needs to be replaced. Life span depends on lamp hours.
	Setpoint not implemented after installation	Carry out setpoint according to procedure.

Type	Problem cause	Procedure
[Disinfection insufficient]	Aging	The UV-C lamp is outdated and needs to be replaced. Life span depends on lamp hours.
	Water flow too high	Set up a study of the flow and adjust it according to the device specification.
	Transmission too low	Investigate the stability of the transmission value and make corrections. Clean the quartz sleeve and UV sensor lens.
	Pollution	Investigate the stability of the transmission value and make corrections. Clean the quartz sleeve and UV sensor lens.

	Aging	The UV sensor and quartz sleeve were not replaced within the replacement term.
	Setpoint not implemented after installation	Carry out setpoint according to procedure.
Type	**Problem cause**	**Procedure**
[No UV intensity]	UV sensor cable damaged	Replace the UV sensor cable
	UV sensor defective	Replace the UV sensor
	UV sensor not configured correctly	See chapter UV sensor for working procedure.
	Disturbance due to signals	Assess the environment for failure factors. Mount the sensor directly on the UV monitor if possible.
	UV-C Lamp defective	Assess the operation and replace the lamp.

Type	**Problem cause**	**Procedure**
[Leakage]	Reactor coupling not correctly fixed	Tighten it further by hand. If it concerns a metal coupling, an assembly tool can be used.
	Leakage in quartz sleeve	Replace the O-ring O-ring must be replaced at every (dis)assembly.
	Quartz sleeve broken	Replace the quartz sleeve for a new one. Check the pipe circuit for glass particles and remove them.
	Pressure sleeve installed the wrong way	Mount the pressure sleeve with the slanted edge towards the O-ring.
	Flow plate not correctly fixed	Check tightness of the bolts where the leak occurs. See the working procedure for more info.
	Leakage along UV sensor	Tighten UV sensor by hand. Replace O-ring of UV sensor.

Type	**Problem cause**	**Procedure**
[UV-C lamp(s) do not light up]	No input power supply	Check the supply voltage and repair it.
	Earth leakage switch activated	Check for leaks and repair them.
	Main switch switched off	Switch it ON
	Remote start/stop function setting.	Check the position of the Remote start/stop switch and adjust it correctly. Assess whether a remote voltage is present if applicable.
	Emergency stop active	Check the total device and repair it operationally.
	Reactor chamber temperature too high	Check the message displayed by control PCA Check for liquid and flow in the reactor chamber. Compare device specifications with the environment. Assess whether the alarm settings are sufficient.

[Notifications control PCA]

See section control PCA for more information.