Water Specialist 1" & 1.25" Motorized Alternating Valve

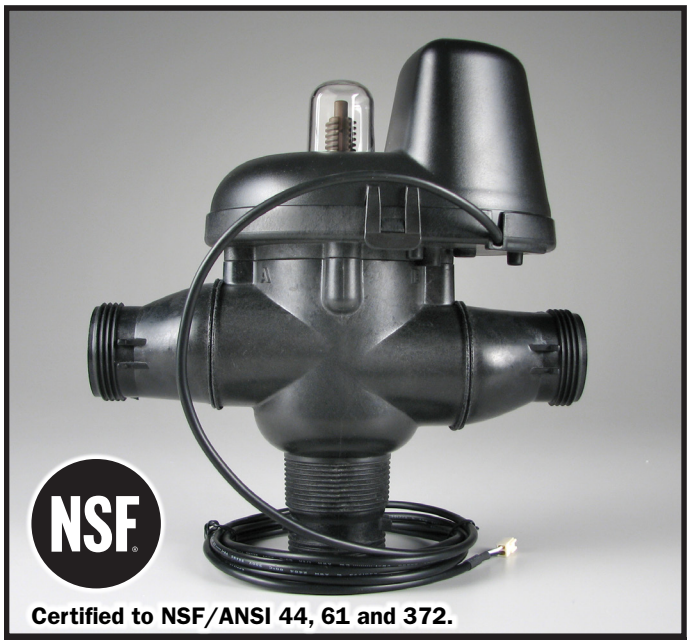

Certified to NSF/ANSI 44, 61 and 372.

Order No. V3069FF-01 • F x F

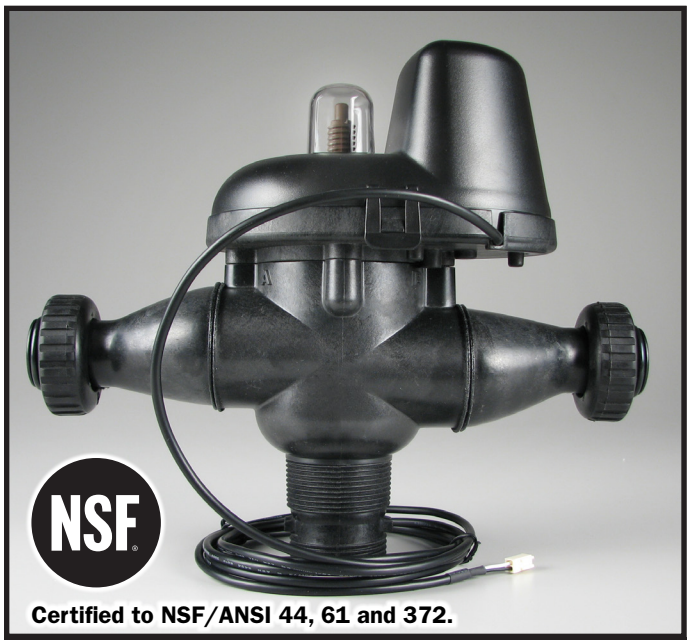

Certified to NSF/ANSI 44, 61 and 372.

Order No. V3069MM-01 • M x M

- Allows for twin alternating system
- Low voltage drive assembly controlled by valve's circuit board
- Utilizes WS1 and WS1.25 Control Valve Fittings
- Full 1.25" ports for minimal pressure loss
- Provides choices of treated or non-treated water regeneration
- Proven and reliable Clack DC drive assembly
- Can be utilized with a single control valve system to accommodate a clean water source for regeneration
- Flow from Port A to Common has a C_v factor of 16.3 (3.4 psi drop at 30 gpm)
- Flow from Port B to Common has a C_v factor of 17.4 (3.0 psi drop at 30 gpm)
- Operating Pressures: 20 PSI Minimum 125 PSI Maximum
- Operating Temperatures: 40°F Minimum 110°F Maximum

CAN ACCOMMODATE UP TO A 16" TANK

Order No. V3069FF-01 • Description: MOTOR ALT VLV 1/125 F-F
or
Order No. V3069MM-01 • Description: MOTOR ALT VLV 1/125 M-M

Drawing No.	Order No.	Description	Quantity	
			V3069FF	V3069MM
1	V3073	MAV/NOHWBY COVER ASY	1	1
2	V3476	WS MOTOR ASY 8 FT	1	1
3	V3592	SCREW #8-3/4 PHPN T-25 SS	3	3
4	V3262-01	WS1.5&2ALT/2BY REDUCGEARCVRASY	1	1
5	V3110-01	WS1 DRIVE REDUCING GEAR PLAIN	3	3
6	V3264	WS2 BYPASS REDUCTION GEAR AXLE	3	3
7	V3527	SCREW 1/4-20 X 3/4 BHSCS SS	4	4
8	V3072	MAV/NOHWBY 1/125/15 DRIVE ASY	1	1
9	V3506-01	MAV/NOHRD 1/125/15 PISTON	1	1
10	V3074	MAV/NOHWBY 1/125/15 STACK ASY	1	1
11	V3504FF	MAV BODY 1/125 ASY F-F	1	N/A
12	V3504MM	MAV BODY 1/125 ASY M-M	N/A	1
13	V3151	WS1 NUT 1 QC	N/A	2
14	V3150	WS1 SPLIT RING	N/A	2
15	V3105	O-RING 215	N/A	2
Not Shown	V3474-01	WS ALT MAV 1/125 CORD 8FT BLK	1	1
*16	V3042	WS1/1.25/1.5 MAV & NHWB SERVICE PACK		

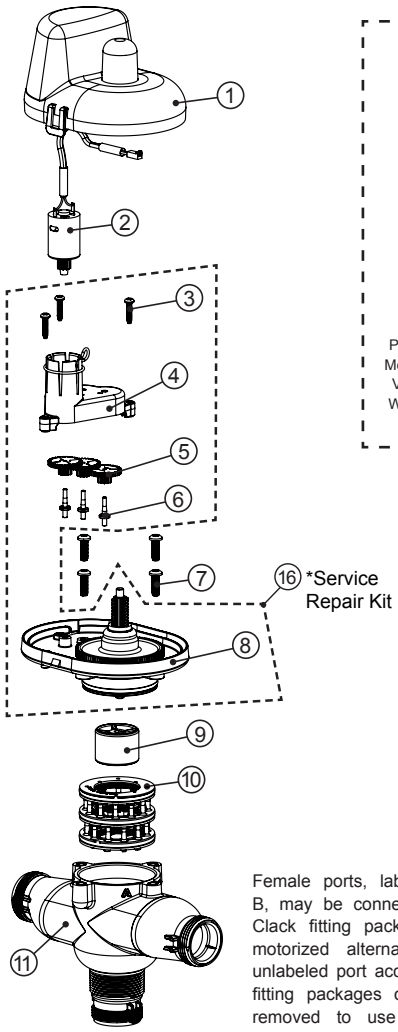

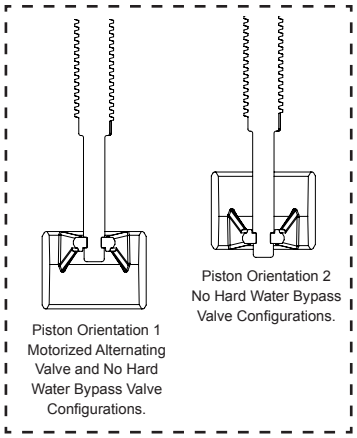

•Operating Pressures:
20 PSI Minimum / 125 PSI Maximum
•Operating Temperatures:
40°F Minimum / 110°F Maximum

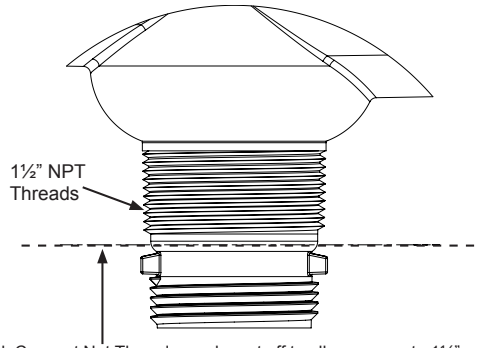

Quick Connect Nut Threads can be cut off to allow access to 1½" NPT Threads. Deburr and clean edge after cutting.
NOTE: Teflon tape is required when using the 1½" NPT Threads.

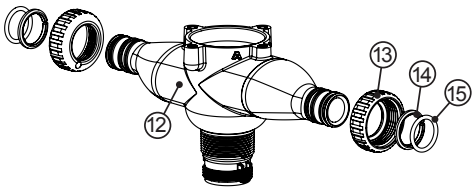

Female ports, labeled A or B, may be connected using Clack fitting packages. The motorized alternating valve unlabeled port accepts Clack fitting packages or may be removed to use 1½ NPT threaded outlet.

Male ports, labeled A or B, may be connected directly to a Clack 1" or 1.25" control valve outlet or to a V3191-01 vertical bypass adapter assembly. When using two sets of V3191-01 you can use up to a 16" tank. The motorized alternating valve outlet accepts Clack fitting packages or may be removed to use 1½" NPT threaded outlet.

Clack®
www.clackcorp.com

Clack Corporation
4462 DURAFORM LANE • WINDSOR, WISCONSIN 53598-9716 USA
PHONE (608) 846-3010 FAX (608) 846-2586 SALES/CUSTOMER SERVICE FAX (800) 755-3010

Form No. 2772 • 1/9/2019